Transient electron currents through a molecular bridge in response to short switching sequences

A. Kalvová , Acad. Sci. of CR, Praha

B. Velický, Charles University and Acad. Sci. of CR, Praha
V. Špička , Acad. Sci. of CR, Praha

Bridge model (non-interacting electrons)

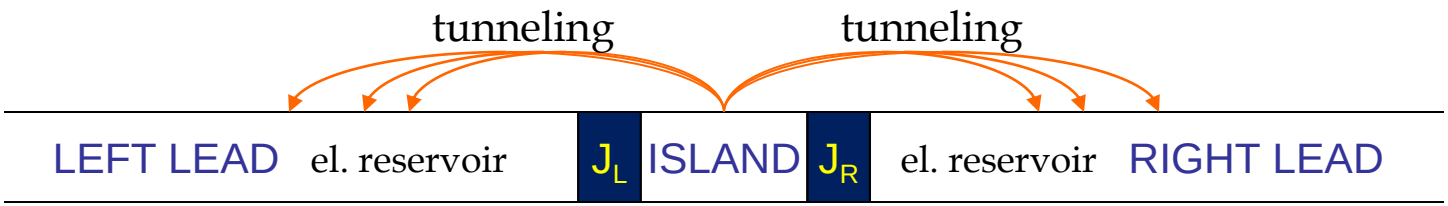

$$\mathbf{Q}_{\mathrm{L}} = \sum_{\ell} |\ell\rangle\langle\ell| \qquad \mathsf{P} = |b\rangle\langle b| \qquad \mathbf{Q}_{\mathrm{R}} = \sum_{r} |r\rangle\langle r|$$

Bound states decay into the continua of lead states

... genuine correlated behavior without interactions

Bridge model (non-interacting electrons)

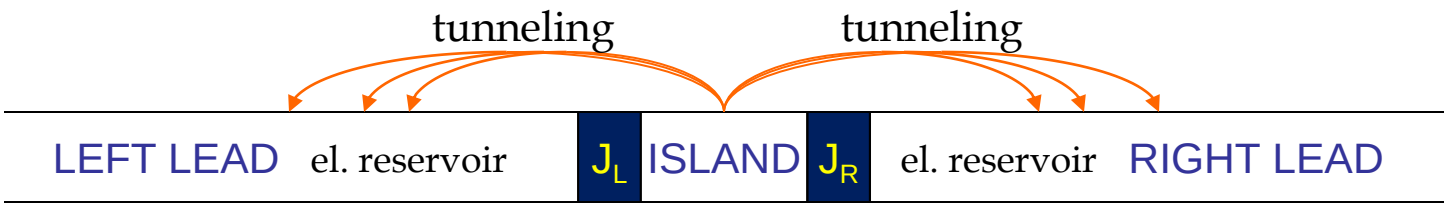

$$\mathbf{Q}_{\mathrm{L}} = \sum_{\ell} |\ell\rangle\langle\ell| \qquad \mathsf{P} = |b\rangle\langle b| \qquad \mathbf{Q}_{\mathrm{R}} = \sum_{r} |r\rangle\langle r|$$

Bound states decay into the continua of lead states

... genuine correlated behavior without interactions

Analogy with interacting systems

Full system unitary evolution of the statistical operator	many-electron system	one-electron states of the bridge structure
Relevant sub-system causal evolution of reduced char. -- NGF	one-electron excitations	one-electron states of the central island

Bridge model (non-interacting electrons)

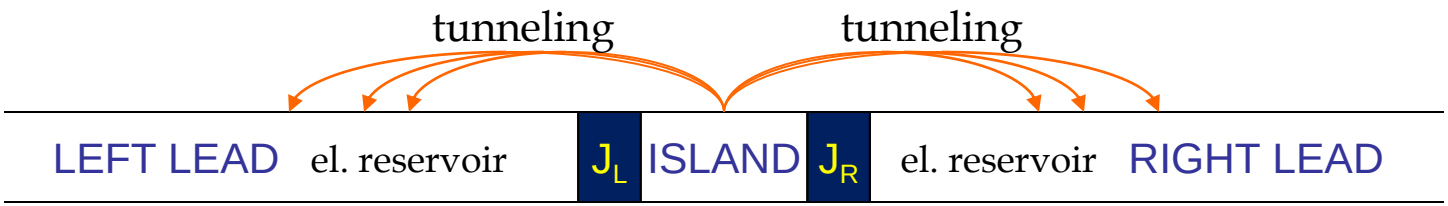

$$\mathbf{Q}_L = \sum_{\ell} |\ell\rangle\langle\ell| \qquad \mathsf{P} = |b\rangle\langle b| \qquad \mathbf{Q}_R = \sum_{r} |r\rangle\langle r|$$

Bound states decay into the continua of lead states

... genuine correlated behavior without interactions

Analogy with interacting systems

Interacting systems	Non-interacting bridge
one-electron excitations	island bound states
multi-electron excitations	lead one-electron decay states
many-body interactions	island-lead coupling

Bridge model (non-interacting electrons)

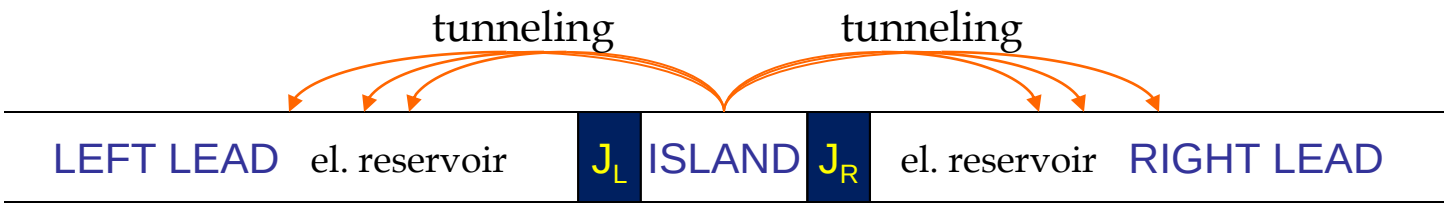

$$\mathbf{Q}_L = \sum_{\ell} |\ell\rangle\langle\ell| \qquad \mathsf{P} = |b\rangle\langle b| \qquad \mathbf{Q}_R = \sum_{r} |r\rangle\langle r|$$

Bound states decay into the continua of lead states

... genuine correlated behavior without interactions

Analogy with interacting systems

Interacting systems	Non-interacting bridge
one-electron excitations	island bound states
multi-electron excitations	lead one-electron decay states
many-body interactions	island-lead coupling
many-body statistical operator	global one-electron density matrix
correlated initial state	island and leads coupled
uncorrelated initial state	island and leads uncoupled

Bridge model (non-interacting electrons)

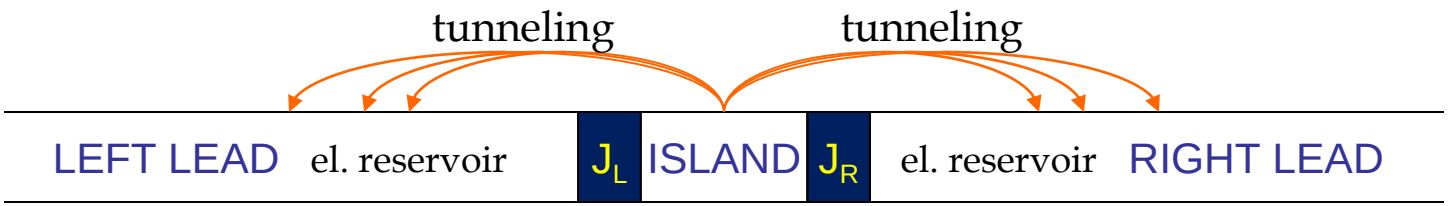

$$\mathcal{H}(t) = \mathcal{H}_0 + \mathcal{H}'(t) \qquad \overbrace{\mathcal{H}'_{\mathrm{L}} + \mathcal{H}'_{\mathrm{R}}}^{\mathcal{H}'}$$

coupling Hamiltonian

Projectors $\mathbf{1}_{\mathrm{op}} = \mathsf{P} + \mathsf{Q}, \qquad \mathsf{P}\mathsf{Q} = 0$

$$\mathsf{P} = \sum_b |b\rangle\langle b| \to |b\rangle\langle b|, \qquad \mathsf{Q} = \mathsf{Q}_{\mathrm{L}} + \mathsf{Q}_{\mathrm{R}} \equiv \sum_\ell |\ell\rangle\langle\ell| + \sum_r |r\rangle\langle r|$$

discrete bound island states

continuum of conducting lead states

Hamiltonian block structure

$$\mathcal{H}_0 = \mathsf{P}\mathcal{H}_0\mathsf{P} + \mathsf{Q}\mathcal{H}_0\mathsf{Q} \qquad \mathcal{H}' = \mathsf{P}\mathcal{H}'\mathsf{Q} + \mathsf{Q}\mathcal{H}'\mathsf{P}$$

NGF for a finite initial time

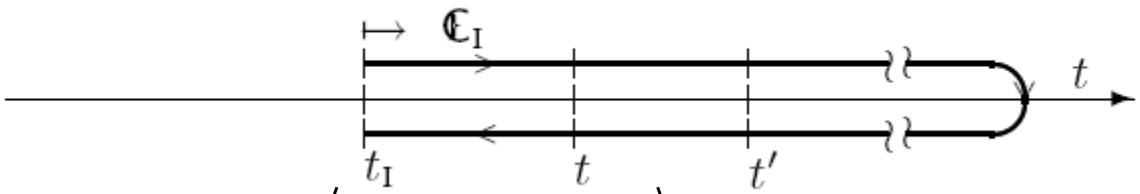

$$G(1,1') = -\mathrm{i}\left\langle \mathbf{T_C}\, \psi(1)\psi^{\dagger}(1')\right\rangle_{\mathrm{I}}$$

causal Green function on the Keldysh contour

average over many-body initial state ↗ arbitrary: non-equilibrium, with correlations ...

$$G \rightarrow \begin{vmatrix} G^R & G^< \\ 0 & G^A \end{vmatrix} \equiv \mathbf{G}_{LW}$$

Reduction for a non-interacting system

$$\mathcal{G}^R = -\mathrm{i}\mathcal{S}(t,t')\vartheta(t-t')$$

$$\mathcal{G}^A = +\mathrm{i}\mathcal{S}(t,t')\vartheta(t'-t)$$

$$\mathcal{G}^<(t,t') = +\mathrm{i}\mathcal{S}(t,t_{\mathrm{I}})\mathcal{P}_{\mathrm{I}}\mathcal{S}(t_{\mathrm{I}},t')$$

$$= +\mathrm{i}\mathcal{G}^R(t,t_{\mathrm{I}})\mathcal{P}_{\mathrm{I}}\mathcal{G}^A(t_{\mathrm{I}},t')$$

fancy letters – entire system

one-particle evolution operator

$$\mathrm{i}\hbar\frac{\partial}{\partial t}\mathcal{S}(t,t') = \mathcal{H}(t)\mathcal{S}(t,t') \qquad \mathcal{S}(t,t) = \mathcal{I}$$

one-particle ↑ Hamiltonian

initial one-particle density matrix

$$\mathcal{P}_{\mathrm{I}}(x,x') = \left\langle \psi(x,t_{\mathrm{I}})\psi^{\dagger}(x',t_{\mathrm{I}})\right\rangle_{\mathrm{I}}$$

NGF for the bound (island) states

Bound states decay into continua of lead states

... genuine GF behavior without interactions

$$\mathsf{Q}_{\mathrm{L}} = \sum_{\ell} |\ell\rangle\langle\ell| \qquad \mathsf{P} = |b\rangle\langle b| \qquad \mathsf{Q}_{\mathrm{R}} = \sum_{r} |r\rangle\langle r|$$

Bound state Green's functions

$$\mathcal{G}^R \to \mathsf{P}\mathcal{G}^R\mathsf{P} = |b\rangle\langle b|\mathcal{G}^R|b\rangle\langle b| = \mathsf{P}G^R,$$

$$\mathcal{G}^A \to \mathsf{P}\mathcal{G}^A\mathsf{P} = |b\rangle\langle b|\mathcal{G}^A|b\rangle\langle b| = \mathsf{P}G^A,$$

$$\mathcal{G}^< \to \mathsf{P}\mathcal{G}^<\mathsf{P} = |b\rangle\langle b|\mathcal{G}^<|b\rangle\langle b| = \mathsf{P}G^<,$$

$$\boxed{\begin{aligned} G^R &\equiv \langle b|\mathcal{G}^R|b\rangle \\ G^A &\equiv \langle b|\mathcal{G}^A|b\rangle \\ G^< &\equiv \langle b|\mathcal{G}^<|b\rangle \end{aligned}}$$

Dyson equations for propagators by Löwdin partitioning (folding down in Hilbert space)

Dyson equations for global propagators are unitary

$$\mathcal{G}^R = \mathcal{G}_0^R + \mathcal{G}_0^R \mathcal{H}' \mathcal{G}^R, \qquad \mathcal{G}^R = \mathcal{G}_0^R + \mathcal{G}^R \mathcal{H}' \mathcal{G}_0^R$$

Free propagators are block diagonal $\Rightarrow$ partitioning expressions

$$\mathbf{Q}\mathcal{G}^R|b\rangle = \mathbf{Q}\mathcal{G}_0^R \mathbf{Q}\mathcal{H}'|b\rangle G^R, \qquad \langle b|\mathcal{G}^R\mathbf{Q} = G^R \langle b|\mathcal{H}'\mathbf{Q}\mathcal{G}_0^R\mathbf{Q}$$

Dyson equations for the island state propagators result

$$G^R = G_0^R + G_0^R \Sigma^R G^R, \qquad G^R = G_0^R + G^R \Sigma^R G_0^R$$

$$\boxed{\Sigma^R = \langle b|\mathcal{H}'\mathbf{Q}\mathcal{G}_0^R\mathbf{Q}\mathcal{H}'|b\rangle}$$

- - - and the same for G^A

Dyson equations for propagators by Löwdin partitioning (folding down in Hilbert space)

sensitive to initial conditions

$$G^{<}(t,t') = \langle b|\mathcal{G}^{<}(t,t')|b\rangle$$

$$= +\mathrm{i}\langle b|\mathcal{G}^{R}(t,t_{\mathbf{I}})\varphi_{\mathbf{I}}\,\mathcal{G}^{A}(t_{\mathbf{I}},t')|b\rangle$$

$$G^{<} = +\mathrm{i}\langle b|\mathcal{G}^{R}\ \mathsf{P}+\mathsf{Q}\ \varphi_{\mathrm{I}}\ \mathsf{P}+\mathsf{Q}\ \mathcal{G}^{A}|b\rangle \ \ldots \ \text{four terms}$$

by partitioning

$$\boxed{G^{<} = G^{R}\Xi^{<}G^{A}}$$

$$\Xi^{<} = {}_{\circ}\Xi^{<}_{\circ} \quad \cdots \mathrm{i}\,\rho(t_{\mathrm{I}})\delta_{tt_{\mathrm{I}}}\delta_{t't_{\mathrm{I}}} \quad \equiv \mathrm{i}\langle b|\,\varphi_{\mathrm{I}}\,|b\rangle\delta_{tt_{\mathrm{I}}}\delta_{t't_{\mathrm{I}}}$$

$$+{}_{\bullet}\Xi^{<}_{\circ} \quad \cdots\ \Lambda^{<}_{\circ}(t,t_{\mathrm{I}})\delta_{t't_{\mathrm{I}}} \quad \equiv \mathrm{i}\langle b|\mathcal{H}'\mathsf{Q}\mathcal{G}^{R}_{0}(t,t_{\mathrm{I}})\mathsf{Q}\,\varphi_{\mathrm{I}}\,|b\rangle\delta_{t't_{\mathrm{I}}}$$

$$+{}_{\circ}\Xi^{<}_{\bullet} \quad \cdots {}_{\circ}\Lambda^{<}(t_{\mathrm{I}},t')\delta_{tt_{\mathrm{I}}} \quad \equiv \mathrm{i}\langle b|\varphi_{\mathrm{I}}\,\mathsf{Q}\mathcal{G}^{A}_{0}(t_{\mathrm{I}},t')\mathsf{Q}\mathcal{H}'|b\rangle\delta_{tt_{\mathrm{I}}}$$

$$+{}_{\bullet}\Xi^{<}_{\bullet} \quad \cdots\ \breve{\Sigma}^{<}(t,t') \quad \equiv \mathrm{i}\,\langle b|\mathcal{H}'\mathsf{Q}\mathcal{G}^{R}_{0}(t,t_{\mathrm{I}})\mathsf{Q}\,\varphi_{\mathrm{I}}\,\mathsf{Q}\mathcal{G}^{A}_{0}(t_{\mathrm{I}},t')\mathsf{Q}\mathcal{H}'|b\rangle$$

Dyson equations for propagators by Löwdin partitioning (folding down in Hilbert space)

sensitive to initial conditions

$$G^{<}(t,t') = \langle b|\mathcal{G}^{<}(t,t')|b\rangle$$

$$= +\mathrm{i}\langle b|\mathcal{G}^{R}(t,t_{\mathrm{I}})\mathcal{P}_{\mathrm{I}}\,\mathcal{G}^{A}(t_{\mathrm{I}},t')|b\rangle$$

$$G^{<}(t,t') = \int_{t_I}^{t} \mathrm{d}\bar{t} \int_{t_I}^{t'} \mathrm{d}\bar{\bar{t}}\; G^{R}(t,\bar{t})\,\Xi^{<}(\bar{t},\bar{\bar{t}})\,G^{A}(\bar{\bar{t}},t')$$

$$\Xi^{<} = \circ\!\cdots\!\circ$$

$$+\bullet\!\cdots\!\circ \qquad \Lambda^{<}(t_{\mathrm{I}},t')\delta_{t't_{\mathrm{I}}} \qquad = \mathrm{i}\langle b|\mathcal{H}'\mathbf{Q}\mathcal{G}_0^{R}(t,t_{\mathrm{I}})\mathbf{Q}\,\mathcal{P}_{\mathrm{I}}|b\rangle\delta_{t't_{\mathrm{I}}}$$

$$+\circ\!\cdots\!\bullet \qquad \Lambda^{<}(t_{\mathrm{I}},t')\delta_{tt_{\mathrm{I}}} \qquad \equiv \mathrm{i}\langle b|\mathcal{P}_{\mathrm{I}}\,\mathbf{Q}\mathcal{G}_0^{A}(t_{\mathrm{I}},t')\mathbf{Q}\mathcal{H}'|b\rangle\delta_{tt_{\mathrm{I}}}$$

$$+\bullet\!\cdots\!\bullet \qquad \breve{\Sigma}^{<}(t,t') \qquad \equiv \mathrm{i}\langle b|\mathcal{H}'\mathbf{Q}\mathcal{G}_0^{R}(t,t_{\mathrm{I}})\mathbf{Q}\,\mathcal{P}_{\mathrm{I}}\,\mathbf{Q}\mathcal{G}_0^{A}(t_{\mathrm{I}},t')\mathbf{Q}\mathcal{H}'|b\rangle$$

Dyson equations for propagators by Löwdin partitioning (folding down in Hilbert space)

sensitive to initial conditions

$$G^{<}(t,t') = \langle b|\mathcal{G}^{<}(t,t')|b\rangle$$

$$= +\mathrm{i}\langle b|\mathcal{G}^{R}(t,t_{\mathbf{I}})\varphi_{\mathbf{I}}\,\mathcal{G}^{A}(t_{\mathbf{I}},t')|b\rangle$$

$$G^{<} = +\mathrm{i}\langle b|\mathcal{G}^{R}\ \mathsf{P}+\mathsf{Q}\ \varphi_{\mathrm{I}}\ \mathsf{P}+\mathsf{Q}\ \mathcal{G}^{A}|b\rangle \ \ldots \ \text{four terms}$$

by partitioning

$$\boxed{G^{<} = G^{R}\Xi^{<}G^{A}}$$

$$\Xi^{<} = {}_{\circ}\Xi^{<}_{\circ} \quad \cdots \mathrm{i}\,\rho(t_{\mathrm{I}})\delta_{tt_{\mathrm{I}}}\delta_{t't_{\mathrm{I}}} \quad \equiv \mathrm{i}\langle b|\varphi_{\mathrm{I}}|b\rangle\delta_{tt_{\mathrm{I}}}\delta_{t't_{\mathrm{I}}}$$

$$+{}_{\bullet}\Xi^{<}_{\circ} \quad \cdots \ \Lambda^{<}_{\circ}(t,t_{\mathrm{I}})\delta_{t't_{\mathrm{I}}} \quad \equiv \mathrm{i}\langle b|\mathcal{H}'\mathsf{Q}\mathcal{G}^{R}_{0}(t,t_{\mathrm{I}})\mathsf{Q}\,\varphi_{\mathrm{I}}|b\rangle\delta_{t't_{\mathrm{I}}}$$

$$+{}_{\circ}\Xi^{<}_{\bullet} \quad \cdots {}_{\circ}\Lambda^{<}(t_{\mathrm{I}},t')\delta_{tt_{\mathrm{I}}} \quad \equiv \mathrm{i}\langle b|\varphi_{\mathrm{I}}\,\mathsf{Q}\mathcal{G}^{A}_{0}(t_{\mathrm{I}},t')\mathsf{Q}\mathcal{H}'|b\rangle\delta_{tt_{\mathrm{I}}}$$

$$+{}_{\bullet}\Xi^{<}_{\bullet} \quad \cdots \ \breve{\Sigma}^{<}(t,t') \quad \equiv \mathrm{i}\,\langle b|\mathcal{H}'\mathsf{Q}\mathcal{G}^{R}_{0}(t,t_{\mathrm{I}})\mathsf{Q}\,\varphi_{\mathrm{I}}\,\mathsf{Q}\mathcal{G}^{A}_{0}(t_{\mathrm{I}},t')\mathsf{Q}\mathcal{H}'|b\rangle$$

Dyson equations for propagators by Löwdin partitioning (folding down in Hilbert space)

$$\boxed{G^{<} = G^{R}\Xi^{<}G^{A}}$$

$$\Xi^{<} = {}_{\circ}\Xi^{<}_{\circ} \quad \cdots \mathrm{i}\,\rho(t_{\mathrm{I}})\delta_{tt_{\mathrm{I}}}\delta_{t't_{\mathrm{I}}} \quad \equiv \mathrm{i}\langle b|\,\mathcal{P}_{\mathrm{I}}\,|b\rangle\delta_{tt_{\mathrm{I}}}\delta_{t't_{\mathrm{I}}}$$

$$+{}_{\bullet}\Xi^{<}_{\circ} \quad \cdots \Lambda^{<}_{\circ}(t,t_{\mathrm{I}})\delta_{t't_{\mathrm{I}}} \quad \equiv \mathrm{i}\langle b|\mathcal{H}'\mathbf{Q}\mathcal{G}^{R}_{0}(t,t_{\mathrm{I}})\mathbf{Q}\,\mathcal{P}_{\mathrm{I}}\,|b\rangle\delta_{t't_{\mathrm{I}}}$$

$$+{}_{\circ}\Xi^{<}_{\bullet} \quad \cdots {}_{\circ}\Lambda^{<}(t_{\mathrm{I}},t')\delta_{tt_{\mathrm{I}}} \quad \equiv \mathrm{i}\langle b|\mathcal{P}_{\mathrm{I}}\,\mathbf{Q}\mathcal{G}^{A}_{0}(t_{\mathrm{I}},t')\mathbf{Q}\mathcal{H}'|b\rangle\delta_{tt_{\mathrm{I}}}$$

$$+{}_{\bullet}\Xi^{<}_{\bullet} \quad \cdots \breve{\Sigma}^{<}(t,t') \quad \equiv \mathrm{i}\,\langle b|\mathcal{H}'\mathbf{Q}\mathcal{G}^{R}_{0}(t,t_{\mathrm{I}})\mathbf{Q}\,\mathcal{P}_{\mathrm{I}}\,\mathbf{Q}\mathcal{G}^{A}_{0}(t_{\mathrm{I}},t')\mathbf{Q}\mathcal{H}'|b\rangle$$

Structure of self-energy $\Xi^{<}$: well known in the field theory

- ${}_{\circ}\Xi^{<}_{\circ}$ uncorrelated initial condition
- ${}_{\bullet}\Xi^{<}_{\circ}$, ${}_{\circ}\Xi^{<}_{\bullet}$ attributes of initial correlations
  - $\cdots$ famous $\Sigma_{\subset}$ and $\Sigma^{\subset}$
- ${}_{\bullet}\Xi^{<}_{\bullet}$ IC transient + regular part

Meaning of self-energy $\Xi^{<}$ for the non-interacting bridge

- ${}_{\circ}\Xi^{<}_{\circ}$ projected one-electron distribution
- ${}_{\bullet}\Xi^{<}_{\circ}$, ${}_{\circ}\Xi^{<}_{\bullet}$ depend on off-diag. "coherences"
- ${}_{\bullet}\Xi^{<}_{\bullet}$ virtual excursions into the leads

Uncorrelated initial condition

exploring the analogy

Uncorrelated initial condition is defined by

$$\langle b|\varphi_{\mathrm{I}}\mathsf{Q}=0, \qquad \mathsf{Q}\varphi_{\mathrm{I}}|b\rangle=0$$

Initial distribution is block-diagonal $\Rightarrow$ the island and lead states are only coupled dynamically, through $\mathscr{H}'$, not by the initial condition.

As expected,

$$\Lambda^{<}_{\circ}={}_{\circ}\Lambda^{<}=0 \quad \Rightarrow$$

$$_{\bullet}\Xi^{<}_{\circ}={}_{\circ}\Xi^{<}_{\bullet}=0 \qquad \text{uncorrelated limit}$$

The Dyson equation reduces to

$$G^{<}=G^{R}\mathrm{i}\rho_{\mathrm{I}}G^{A}+G^{R}\breve{\Sigma}^{<}G^{A}$$

initial (coherent) transient "transport" backscatt. term

Dying out in time Gliding with the running time

decay time memory depth

QP relaxation time

Uncorrelated initial condition

exploring the analogy

Uncorrelated initial condition is defined by

$$\langle b|\varphi_{\mathrm{I}}\mathbf{Q}=0, \qquad \mathbf{Q}\varphi_{\mathrm{I}}|b\rangle=0$$

Initial distribution is block-diagonal $\Rightarrow$ the island and lead states are only coupled dynamically, through $\mathscr{H}'$, not by the initial condition.

As expected,

$$\Lambda^{<}_{\circ} = {}_{\circ}\Lambda^{<} = 0 \quad \Rightarrow$$

$$_{\bullet}\Xi^{<}_{\circ} = {}_{\circ}\Xi^{<}_{\bullet} = 0 \qquad \text{uncorrelated limit}$$

The Dyson equation reduces to

$$G^{<} = G^{R}\mathrm{i}\rho_{\mathrm{I}}G^{A} + G^{R}\breve{\Sigma}^{<}G^{A}$$

initial decay of correlations remains

initial (coherent) transient "transport" backscatt. term

Dying out in time — decay time

Gliding with the running time — memory depth

QP relaxation time

Uncorrelated initial condition

when is the self-energy independent of initial time?

Self-energy

$$\breve{\Sigma}^{<}(t,t';t_{\mathrm{I}}) = \mathrm{i}\langle b|\mathcal{H}'\mathbf{Q}\mathcal{G}_0^R(t,t_{\mathrm{I}})\mathbf{Q}\,\varphi_{\mathrm{I}}\,\mathbf{Q}\mathcal{G}_0^A(t_{\mathrm{I}},t')\mathbf{Q}\mathcal{H}'|b\rangle$$

does not simplify for the uncorrelated initial condition $\langle b|\varphi_{\mathrm{I}}\mathbf{Q} = 0,\ \mathbf{Q}\,\varphi_{\mathrm{I}}\,|b\rangle = 0$

Stronger diagonality condition

$$\left[\mathcal{H}_0(t),\varphi_{\mathrm{I}}\right]_- = 0, \quad t \geq t_{\mathrm{I}}$$

implies $\left[\mathcal{G}_0^{R,A}(t,t'),\varphi_{\mathrm{I}}\right]_- = 0, \quad t \geq t_{\mathrm{I}}$

$$\Sigma^{<}(t,t';t_{\mathrm{I}}) = \mathrm{i}\,\langle b|\mathcal{H}'\mathbf{Q}\mathcal{G}_0^R(t,t_{\mathrm{I}})\mathbf{Q}\,\varphi_{\mathrm{I}}\,\mathbf{Q}\mathcal{G}_0^A(t_{\mathrm{I}},t')\mathbf{Q}\mathcal{H}'|b\rangle$$

$$= \langle b|\mathcal{H}'\mathbf{Q}\mathrm{i}\big(\mathcal{G}_0^R(t,t') - \mathcal{G}_0^A(t,t')\big)\varphi_{\mathrm{I}}\mathbf{Q}\mathcal{H}'|b\rangle$$ t_{I} drops out

$$= \langle b|\mathcal{H}'\mathbf{Q}\mathcal{A}_0(t,t')\varphi_{\mathrm{I}}\mathbf{Q}\mathcal{H}'|b\rangle$$ spectral density

- independent of initial time
- somewhat like the fluctuation-dissipation structure ... towards the KB Ansatz

Uncorrelated initial condition

exploring the analogy

Uncorrelated initial condition is defined by

$$\langle b|\varphi_{\mathrm{I}}\mathsf{Q}=0, \qquad \mathsf{Q}\varphi_{\mathrm{I}}|b\rangle=0$$

Initial distribution is block-diagonal $\Rightarrow$ the island and lead states are only coupled dynamically, through $\mathscr{H}'$, not by the initial condition.

As expected,

$$\Lambda^{<}_{\circ}={}_{\circ}\Lambda^{<}=0 \quad \Rightarrow$$

$$_{\bullet}\Xi^{<}_{\circ}={}_{\circ}\Xi^{<}_{\bullet}=0 \qquad \text{uncorrelated limit}$$

The Dyson equation reduces to

$$G^{<}=G^{R}\mathrm{i}\rho_{\mathrm{I}}G^{A}+G^{R}\Sigma^{<}G^{A}$$

initial (coherent) transient "transport" backscatt. term

Dying out in time Gliding with the running time

decay time memory depth

QP relaxation time

Correlated initial condition

exploring the analogy

Correlated initial condition is defined by

$$\langle b|\varphi_{\mathrm{I}}\mathbf{Q} \neq 0, \qquad \mathbf{Q}\varphi_{\mathrm{I}}|b\rangle \neq 0$$

Initial distribution is **not** block-diagonal $\Rightarrow$ the island and lead states are coupled both dynamically, through $\mathcal{H}'$, **and** by the initial condition.

As expected,

$$\Lambda^{<}_{\circ}, {}_{\circ}\Lambda^{<} \neq 0 \quad \Rightarrow$$

$$_{\bullet}\Xi^{<}_{\circ}, {}_{\circ}\Xi^{<}_{\bullet} \neq 0 \qquad \text{correlated limit}$$

The Dyson equation is complete

$$G^{<} = G^{R}\mathrm{i}\rho_{\mathrm{I}}G^{A} + G^{R}\Lambda^{<}_{\circ}G^{A} + G^{R}\,{}_{\circ}\Lambda^{<}G^{A} + G^{R}\breve{\Sigma}^{<}G^{A}$$

initial (coherent) transient
Dying out in time
decay time

initial correlations
Dying out in time
decay time

"transport" backscatt. term
Gliding with the running time
memory depth

QP relaxation time

Various approaches to correlated initial conditions

Two complementary techniques dealing with correlated initial conditions in current use are compared :

•• those using characteristics of the initial state at t_{I} Here ... the direct method

•• those using the NGF along an extended Schwinger-Keldysh loop Here ... the time partitioning

Two approaches to the correlated initial conditions

Correlated initial conditions have more recently been attacked along two complementary lines:

❶ <u>the synchronous techniques</u>: the correlated initial state represented by a chain of correlation functions at a single -- initial time instant and suitably terminated

Klimontovich → Kremp → … → Bonitz&Semkat …

❷ <u>the diachronous techniques</u>: the finite-time Keldysh loop is extended, commonly by an imaginary stretch, the NGF determined along the extended contour starting at an uncorrelated state; either this is the result, or the finite-loop NGF is deduced by a contraction

Fujita → Hall → Danielewicz → …→ Wagner → Morozov&Röpke …

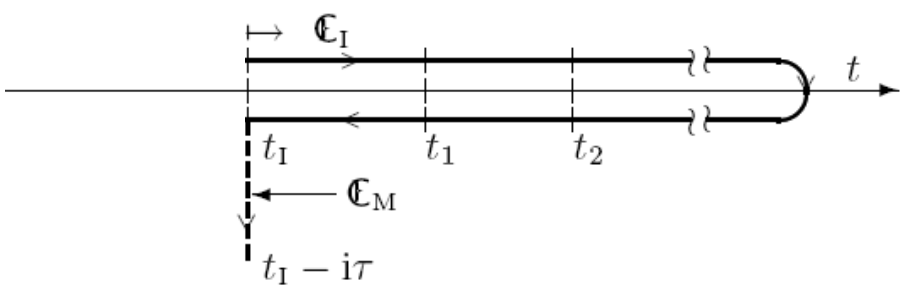

Diachronous vs. synchronous for our bridge model

❶ the synchronous approach: represented by the direct solution by Hilbert space partitioning. In this special case, yields an exact explicit result expressing the self-energy in terms of the full initial density matrix.
For example,

$$\Lambda^{<}_{\circ}(t,t_{\mathrm{I}}) = \mathrm{i}\langle b|\mathscr{H}'\mathbf{Q}\mathscr{G}^{R}_{0}(t,t_{\mathrm{I}})\mathbf{Q}\,\mathscr{P}_{\mathrm{I}}\,|b\rangle$$

❷ the diachronous techniques: the finite-time Keldysh loop is extended along the real time axis now to incorporate the so-called switch-on states (next slide) starting at an uncorrelated state in the distant past. Only NGF enters along the extended contour and the finite-loop NGF is deduced by a subsequent time-partitioning

Danielewicz
Wagner

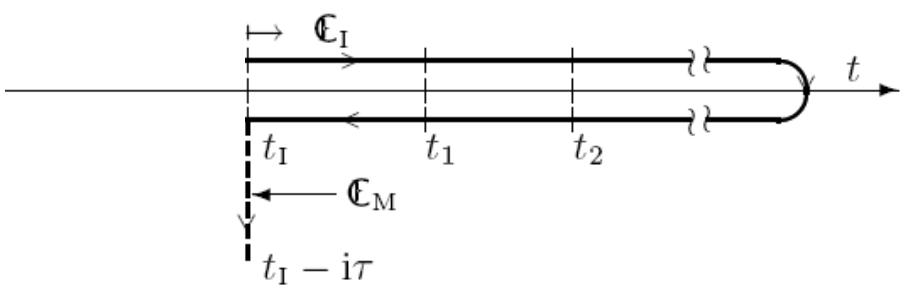

Diachronous vs. synchronous for our bridge model

❶ the synchronous approach: represented by the direct solution by Hilbert space partitioning. In this special case, yields an exact explicit result expressing the self-energy in terms of the full initial density matrix.
For example,

$$\Lambda^{<}_{\circ}(t,t_{\mathrm{I}}) = \mathrm{i}\langle b|\mathscr{H}'\mathbf{Q}\mathcal{G}^{R}_{0}(t,t_{\mathrm{I}})\mathbf{Q}\,\mathscr{P}_{\mathrm{I}}\,|b\rangle$$

❷ the diachronous techniques: the finite-time Keldysh loop is extended along the real time axis now to incorporate the so-called switch-on states (next slide) starting at an uncorrelated state in the distant past. Only NGF enters along the extended contour and the finite-loop NGF is deduced by a subsequent time-partitioning

present approach

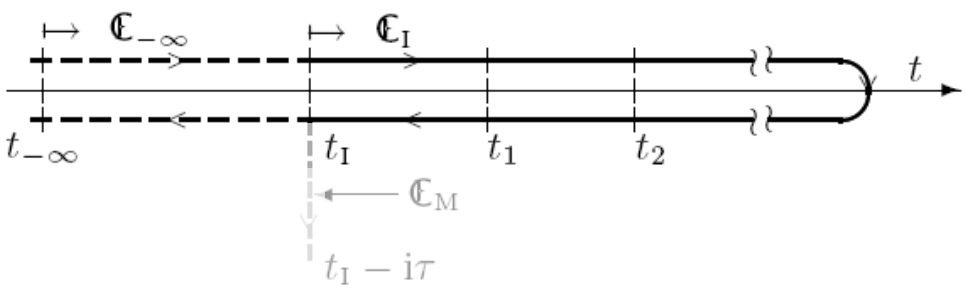

Initial states created by switch-on processes

A "physical" initial state is prepared at $t=t_{\mathrm{I}}$ by a switch-on process antecedent to our transient. The initial conditions at this instant are fully captured by the NGF for the joint process {*preparation* & *transient*}. The transient NGF is extracted by a projection on times future with respect to t_{I} (time partitioning).

Extension of the Keldysh loop

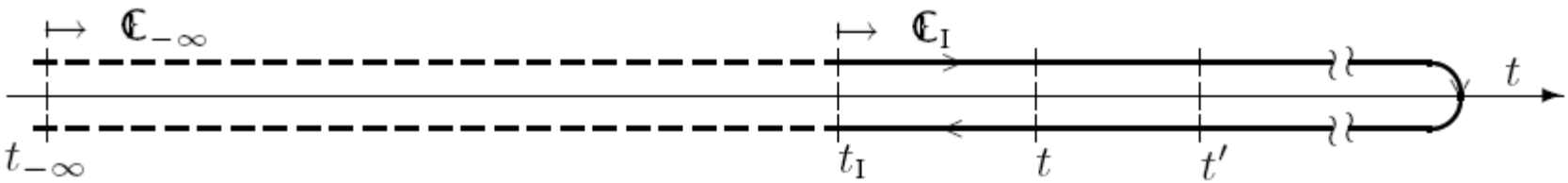

Extension of the Keldysh loop: past and future

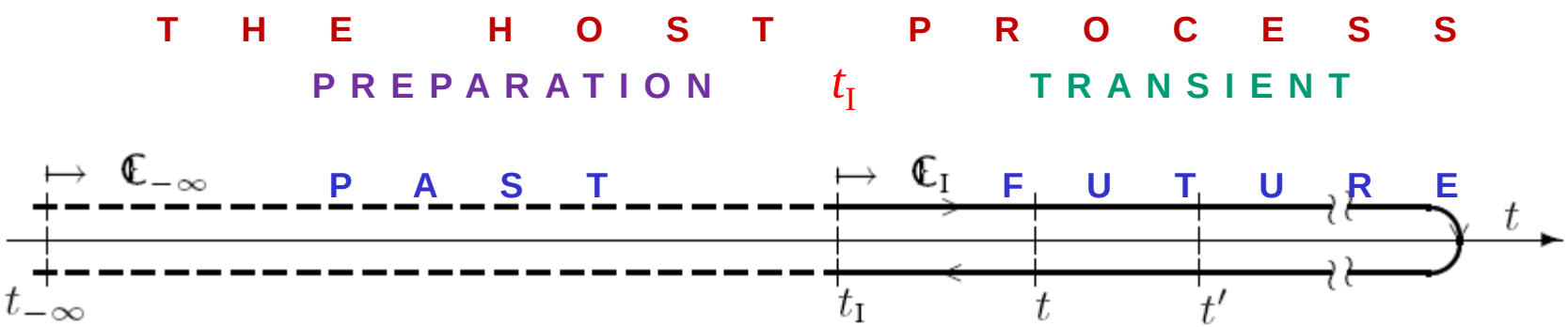

Original Keldysh idea of switching on the interaction

Switch-on transient process with Keldysh initial condition

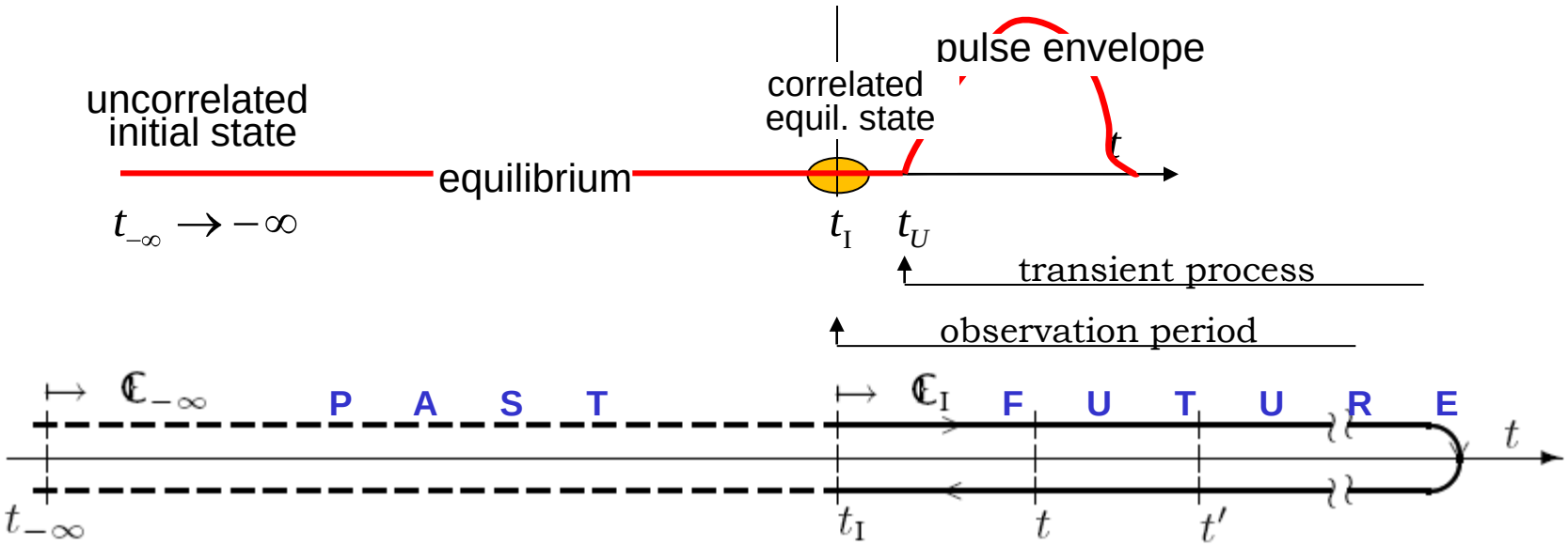

Arbitrary preparatory process in the past

Switch-on transient process with Keldysh initial condition

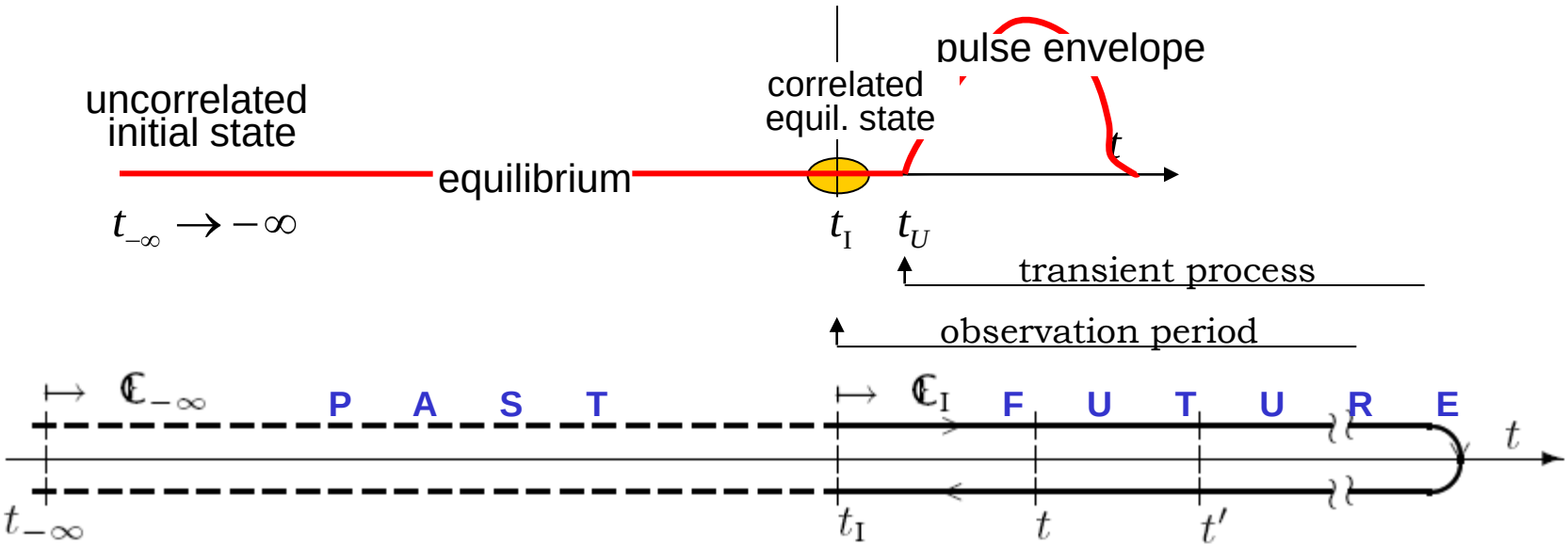

Switch-on process with Keldysh init. cond. and preparation stage

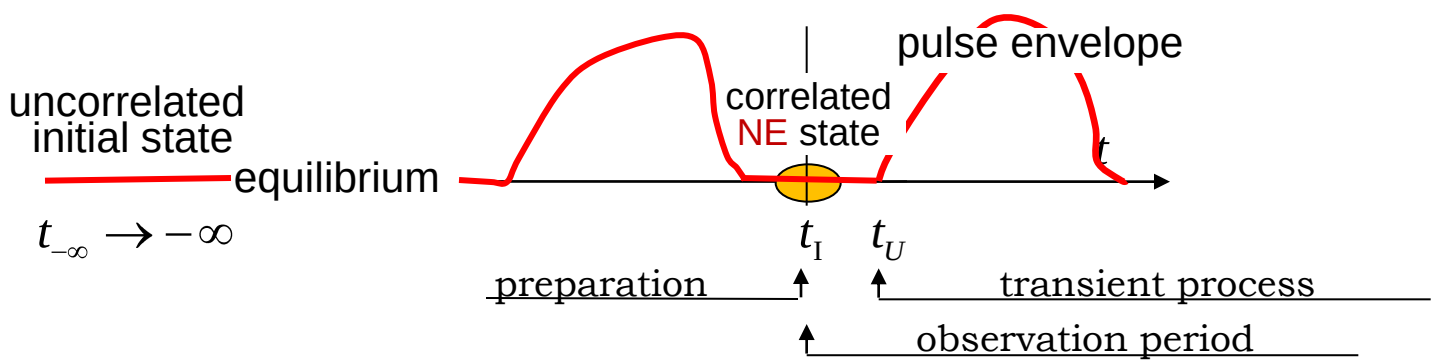

Dyson equation for particle correlation function

HOST PROCESS

$$G^{<}_{-\infty} = G^{R}\Sigma^{<}G^{A}$$

$$G^{<}_{-\infty}(t,t') = \int_{-\infty}^{t} \mathrm{d}u \int_{-\infty}^{t'} \mathrm{d}v G^{R}\Sigma^{<}G^{A}$$

TRANSIENT

$$G^{<} = G^{R}\Xi^{<}G^{A}$$

$$G^{<}(t,t') = \int_{t_{\mathrm{I}}}^{t} \mathrm{d}u \int_{t_{\mathrm{I}}}^{t'} \mathrm{d}v G^{R}\Xi^{<}G^{A}$$

Dyson equation for particle correlation function

HOST PROCESS

$$G^{<}_{-\infty} = G^{R}\Sigma^{<}G^{A}$$

$$G^{<}_{-\infty}(t,t') = \int_{-\infty}^{t} \mathrm{d}u \int_{-\infty}^{t'} \mathrm{d}v G^{R}\Sigma^{<}G^{A}$$

TRANSIENT

$$G^{<} = G^{R}\Xi^{<}G^{A}$$

$$G^{<}(t,t') = \int_{t_{\mathrm{I}}}^{t} \mathrm{d}u \int_{t_{\mathrm{I}}}^{t'} \mathrm{d}v G^{R}\Xi^{<}G^{A}$$

different integration ranges !!!

Dyson equation for particle correlation function

HOST PROCESS

$$G^{<}_{-\infty} = G^{R}\Sigma^{<}G^{A}$$

$$G^{<}_{-\infty}(t,t') = \int_{-\infty}^{t} \mathrm{d}u \int_{-\infty}^{t'} \mathrm{d}v G^{R}\Sigma^{<}G^{A}$$

TRANSIENT

$$G^{<} = G^{R}\Xi^{<}G^{A}$$

$$G^{<}(t,t') = \int_{t_{\mathrm{I}}}^{t} \mathrm{d}u \int_{t_{\mathrm{I}}}^{t'} \mathrm{d}v G^{R}\Xi^{<}G^{A}$$

different integration ranges !!!

$$\begin{aligned}
\Xi^{<} = {}_{\circ}\Xi^{<}_{\circ} \quad & \cdots \mathrm{i}\,\rho(t_{\mathrm{I}})\delta(t-t_{\mathrm{I}})\delta(t'-t_{\mathrm{I}}) \\
+ {}_{\bullet}\Xi^{<}_{\circ} \quad & \cdots \Lambda^{<}_{\circ}(t,t_{\mathrm{I}})\delta(t'-t_{\mathrm{I}}) \\
+ {}_{\circ}\Xi^{<}_{\bullet} \quad & \cdots {}_{\circ}\Lambda^{<}(t_{\mathrm{I}},t')\delta(t-t_{\mathrm{I}}) \\
+ {}_{\bullet}\Xi^{<}_{\bullet} \quad & \cdots \breve{\Sigma}^{<}(t,t') = \Sigma^{<}(t,t') + \widehat{\Sigma}^{<}(t,t')
\end{aligned}$$

- NEW INTERPRETATION OF $\Xi^{<}$: **the purple terms add to the host $\Sigma^{<}$ in the right hand integral to compensate for the reduced integration range**
- **TASK: express the future-future block of $\Xi^{<}$ in terms of the past-past and past-future blocks of the host GF and self-energies**

PARTITIONING-IN-TIME METHOD

Time partitioning for self-energy

EXAMPLE

$$\Lambda_{\circ}^{<}(v,t_{\mathrm{I}}) = (-\mathrm{i})\int_{-\infty}^{t_{\mathrm{I}}} \mathrm{d}\,\bar{\bar{t}}\,\{\Sigma^{<}(v,\bar{\bar{t}})G^{A}(\bar{\bar{t}},t_{\mathrm{I}}) + \Sigma^{R}(v,\bar{\bar{t}})G_{-\infty}^{<}(\bar{\bar{t}},t_{\mathrm{I}})\}$$

- Diachronous form: only GF and self-energies of the island state occur, but for arbitrary times
- the GF (propagation) entirely in the past, the self-energies bridging over the initial time -- linking the past with the future

Time partitioning for self-energy *vs.* the direct method

EXAMPLE

$$\Lambda_{\circ}^{<}(v,t_{\mathrm{I}}) = (-\mathrm{i})\int_{-\infty}^{t_{\mathrm{I}}} \mathrm{d}\,\bar{\bar{t}}\,\{\Sigma^{<}(v,\bar{\bar{t}})G^{A}(\bar{\bar{t}},t_{\mathrm{I}}) + \Sigma^{R}(v,\bar{\bar{t}})G_{-\infty}^{<}(\bar{\bar{t}},t_{\mathrm{I}})\}$$

- Diachronous form: only GF and self-energies of the island state occur, but for arbitrary times
- the GF (propagation) entirely in the past, the self-energies bridging over the initial time -- linking the past with the future

➤ Compare with synchronous approach: the direct solution by Hilbert space partitioning is

$$\Lambda_{\circ}^{<}(t,t_{\mathrm{I}}) = \mathrm{i}\langle b|\mathscr{H}'\mathbf{Q}\mathcal{G}_{0}^{R}(t,t_{\mathrm{I}})\mathbf{Q}\,\mathcal{P}_{\mathrm{I}}|b\rangle,$$

- the two solutions can be derived one from the other -- verification of their equivalence , visualization of complementarity of both views.

<u>Basic idea:</u> *employ the evolution in the past from the Keldysh initial cond.*

$$\Lambda_{\circ}^{<}(t,t_{\mathrm{I}}) = \mathrm{i}\langle b|\mathscr{H}'\mathbf{Q}\overbrace{\mathcal{G}_{0}^{R}(t,t_{\mathrm{I}})\mathbf{Q}\,\mathcal{P}_{\mathrm{I}}}^{\mathcal{G}^{R}(t_{\mathrm{I}},t_{-\infty})\mathcal{P}_{-\infty}\mathcal{G}^{A}(t_{-\infty},t_{\mathrm{I}})}|b\rangle,$$

$\mathcal{P}_{-\infty}$ block diagonal ("uncorrelated")

The rest is an algebra employing the Dyson equations for $\mathcal{G}^{R}, \mathcal{G}^{A}$.

Time partitioning and decay of correlations

EXAMPLE

$$\Lambda^{<}_{\circ}(v,t_{\mathrm{I}}) = (-\mathrm{i})\int_{-\infty}^{t_{\mathrm{I}}} \mathrm{d}\,\bar{\bar{t}}\,\{\Sigma^{<}(v,\bar{\bar{t}})G^{A}(\bar{\bar{t}},t_{\mathrm{I}}) + \Sigma^{R}(v,\bar{\bar{t}})G^{<}_{-\infty}(\bar{\bar{t}},t_{\mathrm{I}})\}$$

- Diachronous form: only GF and self-energies of the island state occur, but for arbitrary times
- the GF (propagation) entirely in the past, the self-energies bridging over the initial time -- linking the past with the future

➤ Typical hierarchy of times

decay of correlations quasiparticle formation		quasiparticle decay relaxation time		~~hydrodynamic time~~
τ^{*}	$\ll$	τ	$\ll$	τ_{H}

time depth of the self-energy $\Sigma^{R,A,<}(t,t') \approx 0$ for $|t-t'| > \tau^{*}$

thus

$$t_{\mathrm{I}} - \tau^{*} < \bar{\bar{t}} < t_{\mathrm{I}} < v < t_{\mathrm{I}} + \tau^{*}$$ *(Bogolyubov principle)*

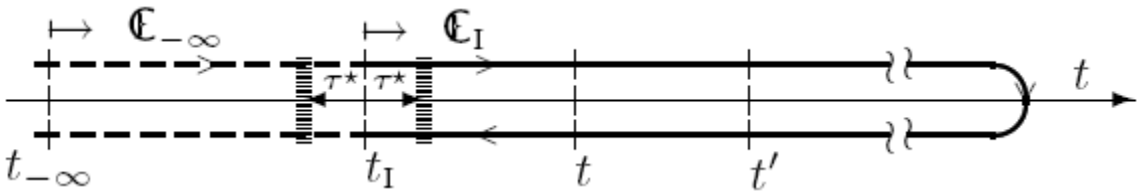

Molecular bridge with time-dependent coupling

One source of transient behavior in the bridge structure are fast changes in the coupling strengths of both junctions.

We contrast different sudden transitions between a coupled and an uncoupled state of a junction, some reducing to the uncorrelated initial state, other manifesting the correlated behavior.

Time dependent coupling

Changes in the coupling strength of the junctions are interesting

- can be very fast – extreme of possibility of ensuing transients
- exotic – represent a time dependent "interaction" strength in our analogy
- partitioning in time is technically well suited

Bridge Hamiltonian further specialized

$$\mathscr{H}(t) = \mathscr{H}_0 + \mathscr{H}'(t)$$

$$\mathscr{H}'(t) = \alpha_{\mathrm{R}}(t)\mathscr{V}_{\mathrm{R}} + \alpha_{\mathrm{L}}(t)\mathscr{V}_{\mathrm{L}}$$

All time dependence in the α amplitudes

Processes start as switch-on at $t_{-\infty} \to -\infty$,
the couplings switched on adiabatically in the past (*preparation*),
then vary arbitrarily starting from t_{I} (*transient – observation*)

Expressions for self-energy of the switching processes

All components of the self-energy have only regular parts (... $t_{-\infty} \to -\infty$) identical with usual JWM expressions:

$$\boxed{\mathscr{H}'(t) = \alpha_{\mathrm{R}}(t)\mathscr{V}_{\mathrm{R}} + \alpha_{\mathrm{L}}(t)\mathscr{V}_{\mathrm{L}}}$$

$$\Sigma^{X}(t,t') = \langle b|\mathscr{H}'(t)\mathbf{Q}\mathscr{G}_0^{X}\mathbf{Q}\mathscr{H}'(t')|b\rangle$$

$$= \alpha_{\mathrm{L}}(t)\sigma_{\mathrm{L}}^{X}(t,t')\alpha_{\mathrm{L}}(t') + \alpha_{\mathrm{R}}(t)\sigma_{\mathrm{R}}^{X}(t,t')\alpha_{\mathrm{R}}(t')$$

$$\sigma_{\mathrm{Y}}^{X}(t,t') = \langle b|\mathscr{V}_{\mathrm{Y}}\mathbf{Q}\mathscr{G}_0^{X}(t,t')\mathbf{Q}\mathscr{V}_{\mathrm{Y}}|b\rangle, \qquad \boxed{X = R, A, <} \qquad \boxed{\mathrm{Y}=\mathrm{L}, \mathrm{R}}$$

Expressions for self-energy of the switching processes

All components of the self-energy have only regular parts (... $t_{-\infty} \to -\infty$) identical with usual JWM expressions:

$$\boxed{\mathscr{H}'(t) = \alpha_{\mathrm{R}}(t)\mathscr{V}_{\mathrm{R}} + \alpha_{\mathrm{L}}(t)\mathscr{V}_{\mathrm{L}}}$$

$$\Sigma^{X}(t,t') = \langle b|\mathscr{H}'(t)\mathbf{Q}\mathscr{G}_0^{X}\mathbf{Q}\mathscr{H}'(t')|b\rangle$$

$$= \alpha_{\mathrm{L}}(t)\sigma_{\mathrm{L}}^{X}(t,t')\alpha_{\mathrm{L}}(t') + \alpha_{\mathrm{R}}(t)\sigma_{\mathrm{R}}^{X}(t,t')\alpha_{\mathrm{R}}(t')$$

$$\sigma_{\mathrm{Y}}^{X}(t,t') = \langle b|\mathscr{V}_{\mathrm{Y}}\mathbf{Q}\mathscr{G}_0^{X}(t,t')\mathbf{Q}\mathscr{V}_{\mathrm{Y}}|b\rangle, \qquad \boxed{X = R, A, <} \qquad \boxed{\mathrm{Y}=\mathrm{L},\mathrm{R}}$$

These “host process” steady single junction self-energies will serve as building blocks for generating the transient self-energies by partitioning-in-time.

Expressions for self-energy of the switching processes

All components of the self-energy have only regular parts (... $t_{-\infty} \to -\infty$) identical with usual JWM expressions:

$$\boxed{\mathscr{H}'(t) = \alpha_{\mathrm{R}}(t)\mathscr{V}_{\mathrm{R}} + \alpha_{\mathrm{L}}(t)\mathscr{V}_{\mathrm{L}}}$$

$$\Sigma^{X}(t,t') = \langle b|\mathscr{H}'(t)\mathbf{Q}\mathscr{G}_0^{X}\mathbf{Q}\mathscr{H}'(t')|b\rangle$$

$$= \alpha_{\mathrm{L}}(t)\sigma_{\mathrm{L}}^{X}(t,t')\alpha_{\mathrm{L}}(t') + \alpha_{\mathrm{R}}(t)\sigma_{\mathrm{R}}^{X}(t,t')\alpha_{\mathrm{R}}(t')$$

$$\sigma_{\mathrm{Y}}^{X}(t,t') = \langle b|\mathscr{V}_{\mathrm{Y}}\mathbf{Q}\mathscr{G}_0^{X}(t,t')\mathbf{Q}\mathscr{V}_{\mathrm{Y}}|b\rangle, \qquad \boxed{X = R, A, <} \qquad \boxed{\mathrm{Y}=\mathrm{L},\mathrm{R}}$$

These "host process" steady single junction self-energies will serve as building blocks for generating the transient self-energies by partitioning-in-time. → Transformation to Fourier integrals of coupling spectral densities

$$\sigma_{\mathrm{Y}}^{R,A}(t,t') = \pm i\langle b|\mathscr{V}_{\mathrm{Y}}\mathbf{Q}_{\mathrm{Y}}\mathscr{A}_0(t,t')\mathbf{Q}_{\mathrm{Y}}\mathscr{V}_{\mathrm{Y}}|b\rangle\,\Gamma(\pm(t-t'))$$

$$\sigma_{\mathrm{Y}}^{<}(t,t') = \quad i\langle b|\mathscr{V}_{\mathrm{Y}}\mathbf{Q}\mathscr{A}_0(t,t')\mathscr{P}_{-\infty}\mathbf{Q}\mathscr{V}_{\mathrm{Y}}|b\rangle$$

$$\sigma_{\mathrm{Y}}^{R,A}(t,t') = \pm i\int\frac{dE}{2\pi}\Delta_{\mathrm{Y}}(E)\mathrm{e}^{-iE(t-t')}\cdot\,\Gamma(\pm(t-t'))$$

$$\sigma_{\mathrm{Y}}^{<}(t,t') = \quad i\int\frac{dE}{2\pi}\Delta_{\mathrm{Y}}(E)\,f_{\mathrm{Y}}(E)\mathrm{e}^{-iE(t-t')}$$

$$\boxed{\Delta_{\mathrm{Y}}(E) = 2\pi\langle b|\mathscr{V}_{\mathrm{Y}}\delta(E-\mathscr{H}_{0\mathrm{Y}})\mathscr{V}_{\mathrm{Y}}|b\rangle}$$

Model electronic structure used in calculations

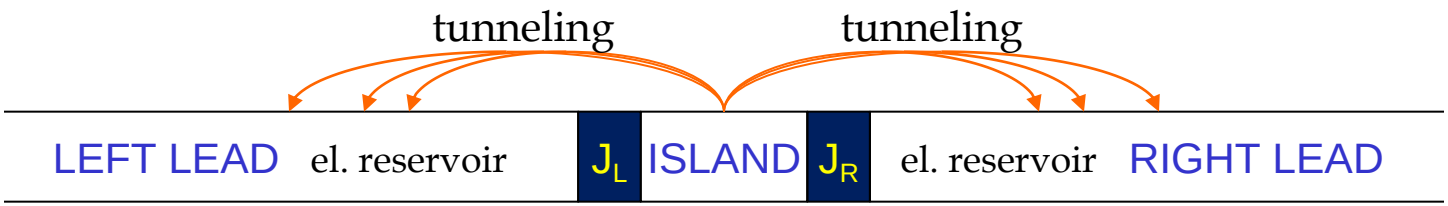

$$\mathbf{Q}_L = \sum_{\ell} |\ell\rangle\langle\ell| \qquad \mathbf{P} = |b\rangle\langle b| \qquad \mathbf{Q}_R = \sum_{r} |r\rangle\langle r|$$

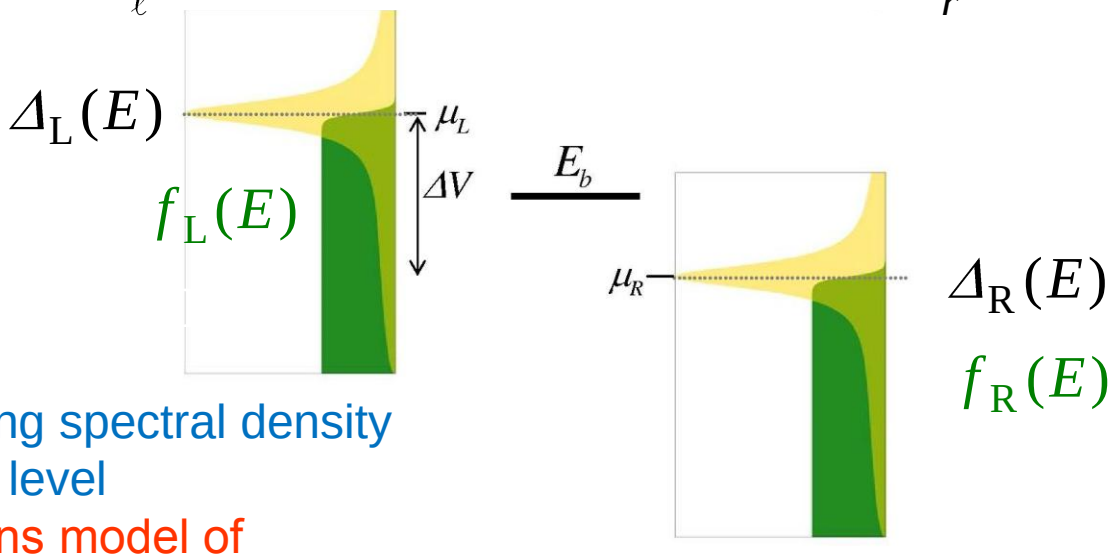

The resonant coupling spectral density floating at the Fermi level

… Newns model of transition metal substrate

Model electronic structure used in calculations

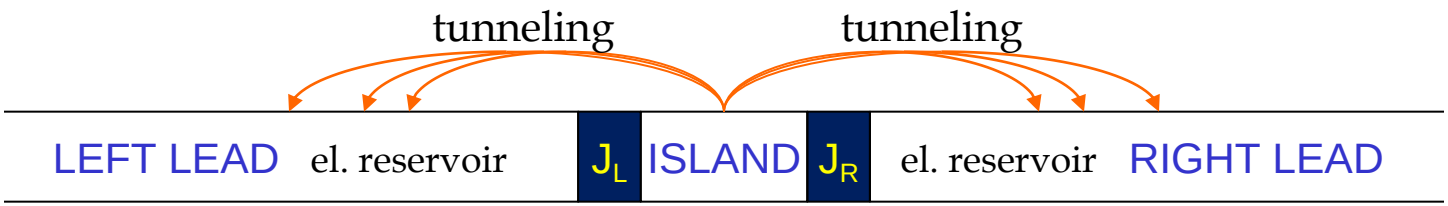

$$Q_L = \sum_{\ell} |\ell\rangle\langle\ell| \qquad P = |b\rangle\langle b| \qquad Q_R = \sum_{r} |r\rangle\langle r|$$

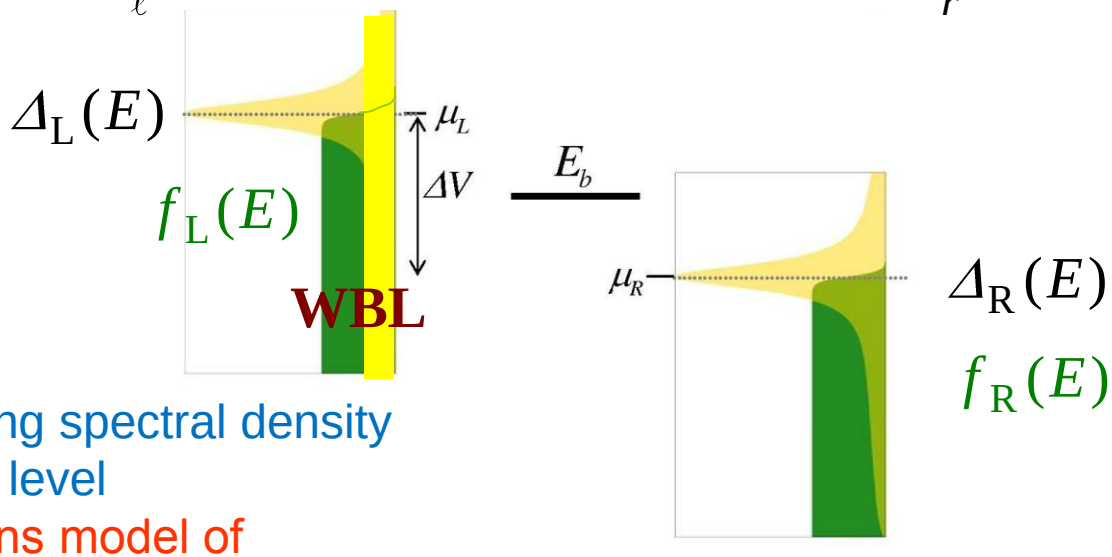

The resonant coupling spectral density floating at the Fermi level

… Newns model of transition metal substrate

Compare with the WBL model sp. density (wide band limit) for the left electrode

Two leads connected simultaneously

Uncorrelated initial condition case

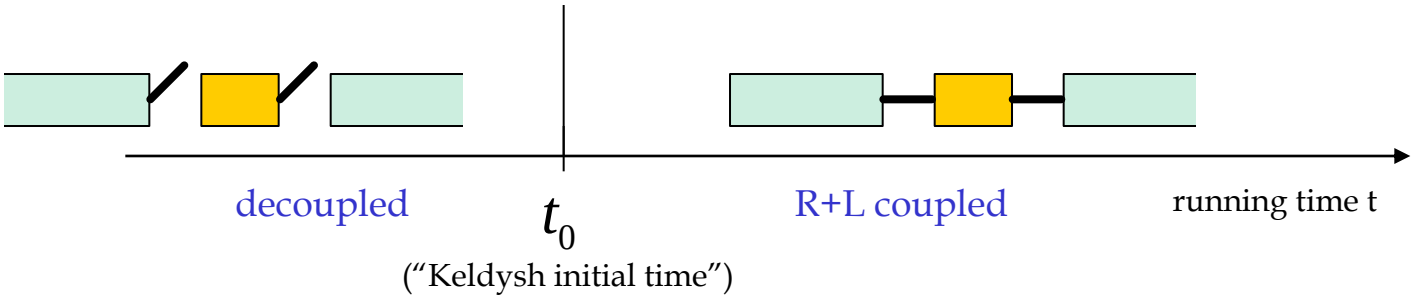

$$-(\dot{N}_{\dashv} + \dot{N}_{\vdash}) = \dot{\mathcal{G}}^{<}(t,t)$$

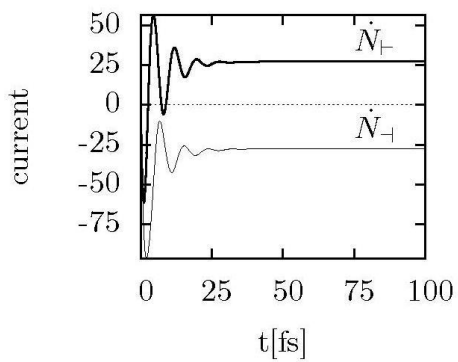

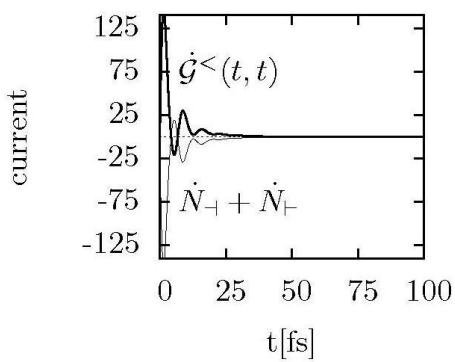

$$\dot{N}_{\dashv} = -\frac{\mathrm{i}}{\hbar}\,\mathrm{Im}\{\int_{t_0}^{t} \Sigma_{\dashv}^{R}\mathcal{G}_{+}^{<} + \int_{t_0}^{t} \Sigma_{\dashv}^{<}\mathcal{G}_{+}^{A}\}$$

$$\dot{N}_{\vdash} = -\frac{\mathrm{i}}{\hbar}\,\mathrm{Im}\{\int_{t_0}^{t} \Sigma_{\vdash}^{R}\mathcal{G}_{+}^{<} + \int_{t_0}^{t} \Sigma_{\vdash}^{<}\mathcal{G}_{+}^{A}\}$$

Two leads connected simultaneously

Uncorrelated initial condition case

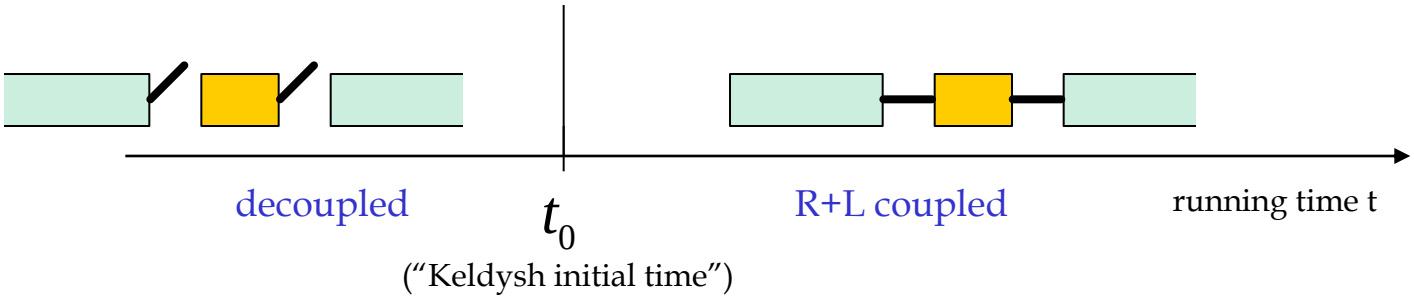

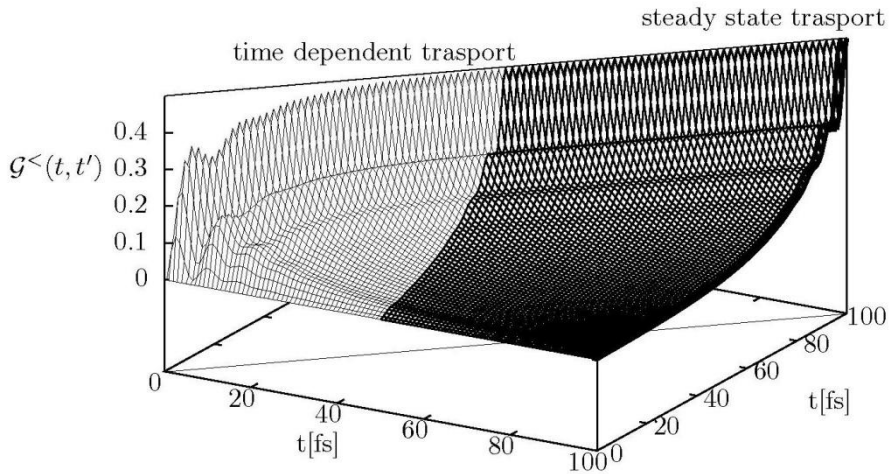

$$\mathcal{G}^<_{\uparrow\uparrow}(t,t') = \mathcal{G}^R_{\uparrow\uparrow}\rho_0\mathcal{G}^A_{\uparrow\uparrow} + \mathcal{G}^R_{\uparrow\uparrow}\,\Sigma^<_{\uparrow\uparrow}\mathcal{G}^A_{\uparrow\uparrow}$$

Two leads connected simultaneously

Uncorrelated initial condition case

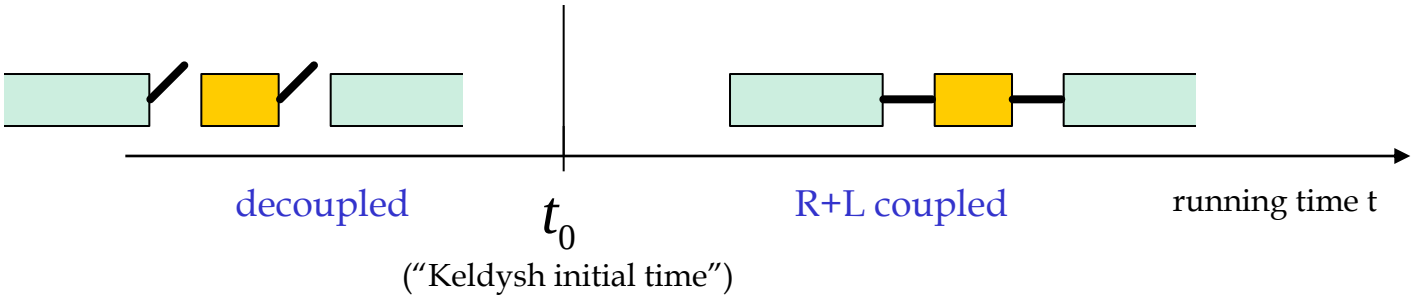

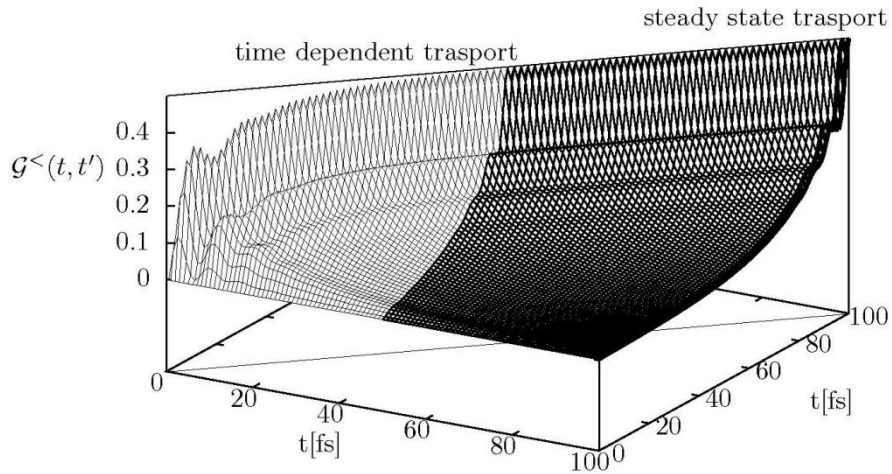

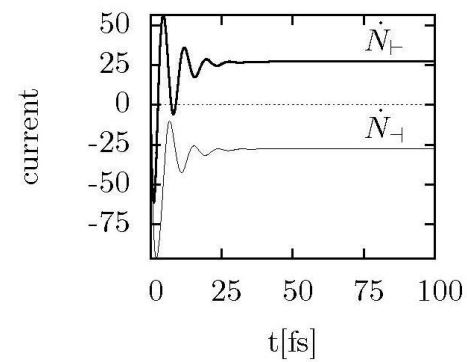

steady state transport: Meir-Wingreen formula

$$J_{i=\dashv,\vdash} = \frac{ie}{\hbar}\int \frac{d\epsilon}{2\pi}\Gamma_i(\epsilon - e\varphi_i)\left(\mathcal{G}^<(\epsilon) + f_{FD,i}(\epsilon - e\varphi_i)[\mathcal{G}^R(\epsilon) - \mathcal{G}^A(\epsilon)]\right)$$

$$\Gamma_i = i(\Sigma_i^R - \Sigma_i^A) \qquad \mathcal{G}^{R,A,<} \equiv \mathcal{G}_{++}^{R,A,<}$$

Two leads connected one by one

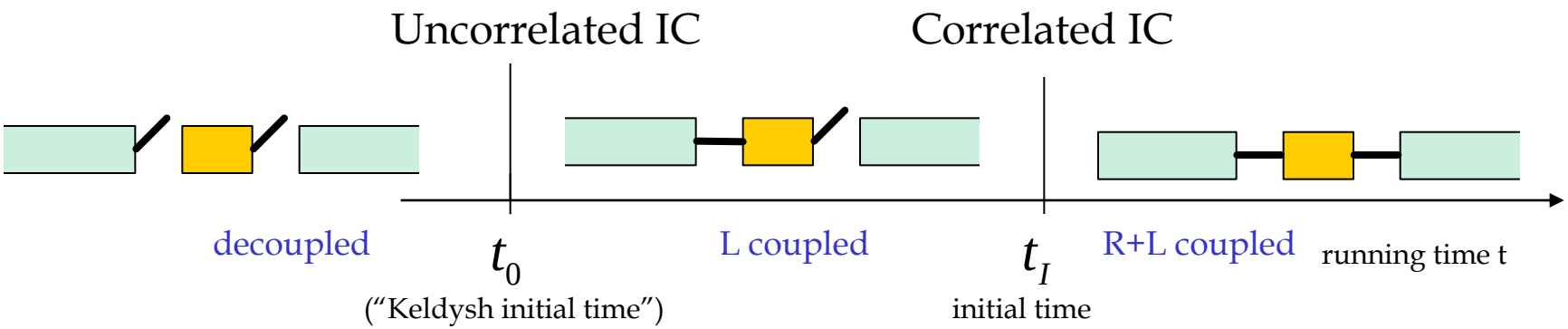

$$-(\dot{N}_{\dashv} + \dot{N}_{\vdash}) = \dot{\mathcal{G}}^{<}(t,t)$$

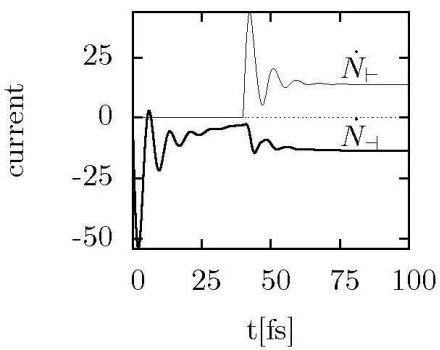

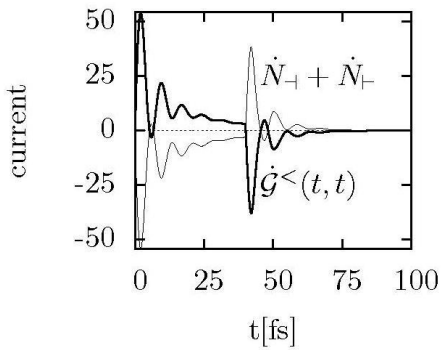

$$\dot{N}_{\dashv} = -\frac{i}{\hbar}\,\mathrm{Im}\{\int_{t_0}^{t} \Sigma_{\dashv}^{R}\mathcal{G}^{<} + \int_{t_0}^{t} \Sigma_{\dashv}^{<}\mathcal{G}^{A}\}$$

$$\dot{N}_{\vdash} = -\frac{i}{\hbar}\,\mathrm{Im}\{\int_{t_0}^{t} \Sigma_{\vdash}^{R}\mathcal{G}^{<} + \int_{t_0}^{t} \Sigma_{\vdash}^{<}\mathcal{G}^{A}\}$$

Two leads connected one by one

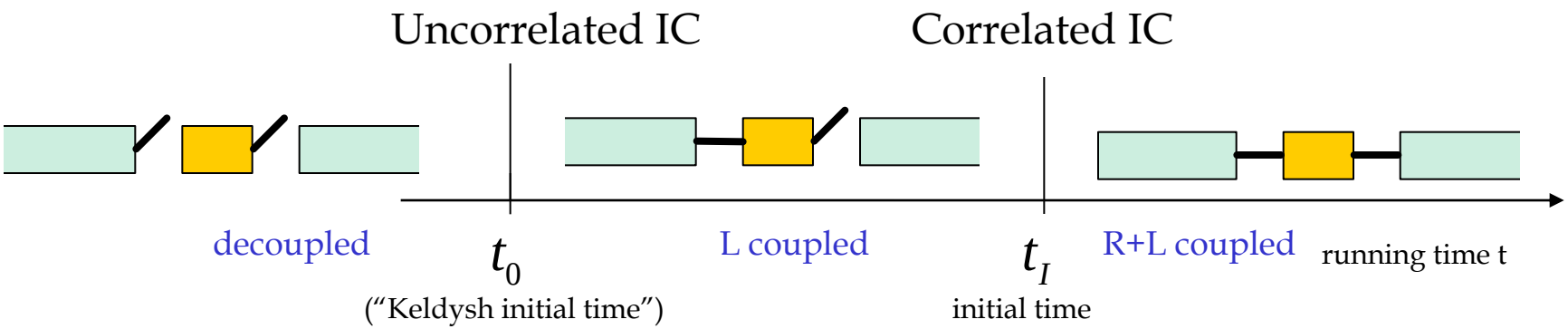

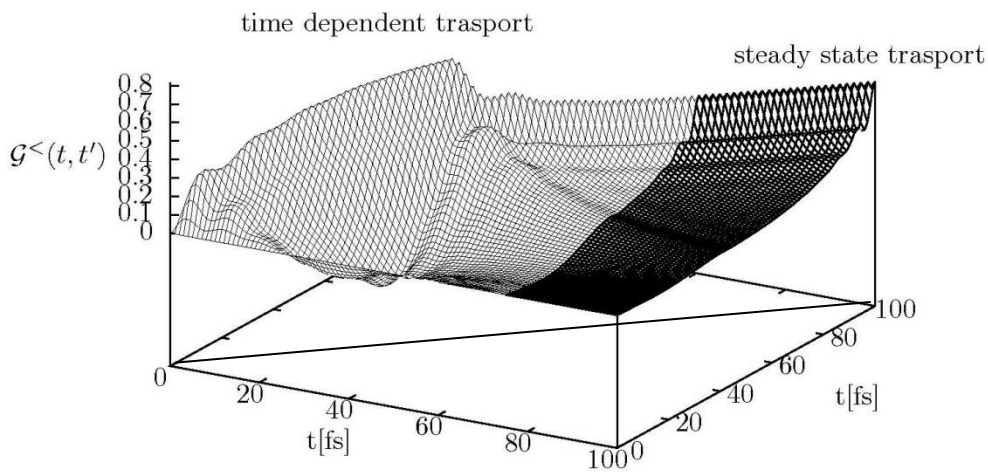

$$\mathcal{G}^<(t,t') = \mathcal{G}^R \rho_0 \mathcal{G}^A + \mathcal{G}^R \Sigma^< \mathcal{G}^A$$

Two leads connected one by one

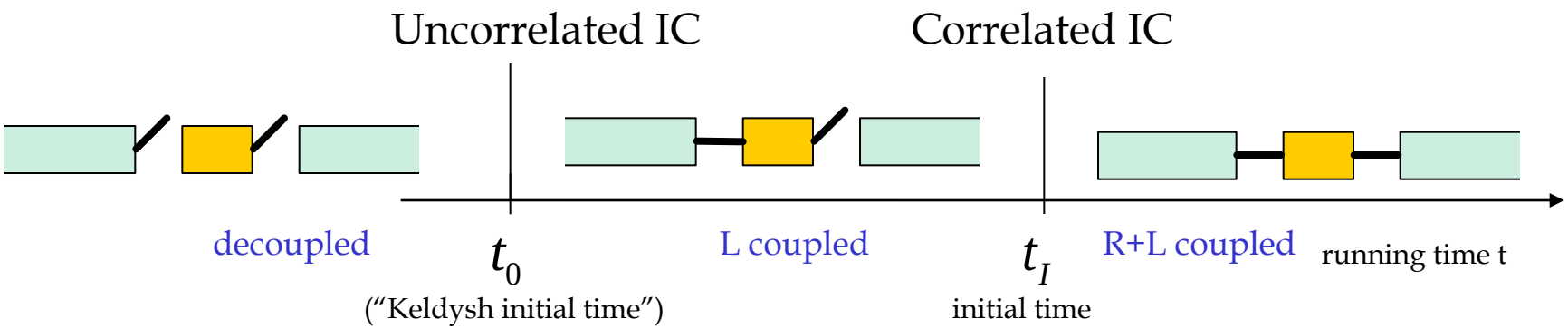

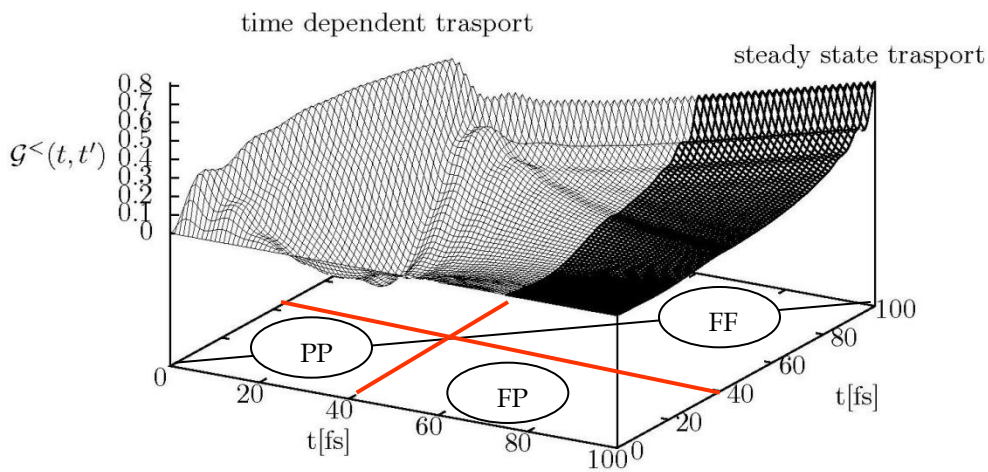

$$\mathcal{G}^<(t,t') = \mathcal{G}^R \rho_0 \mathcal{G}^A + \mathcal{G}^R \Sigma^< \mathcal{G}^A$$

Two leads connected one by one

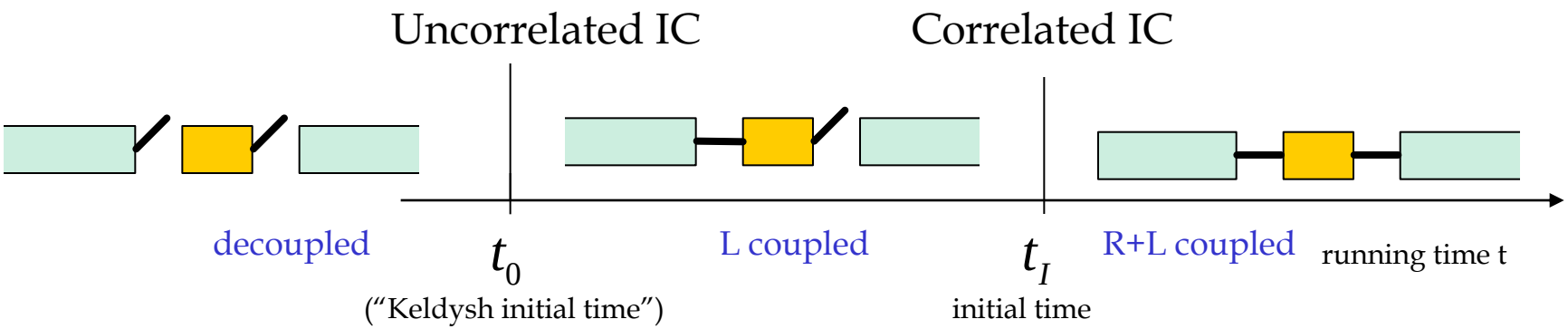

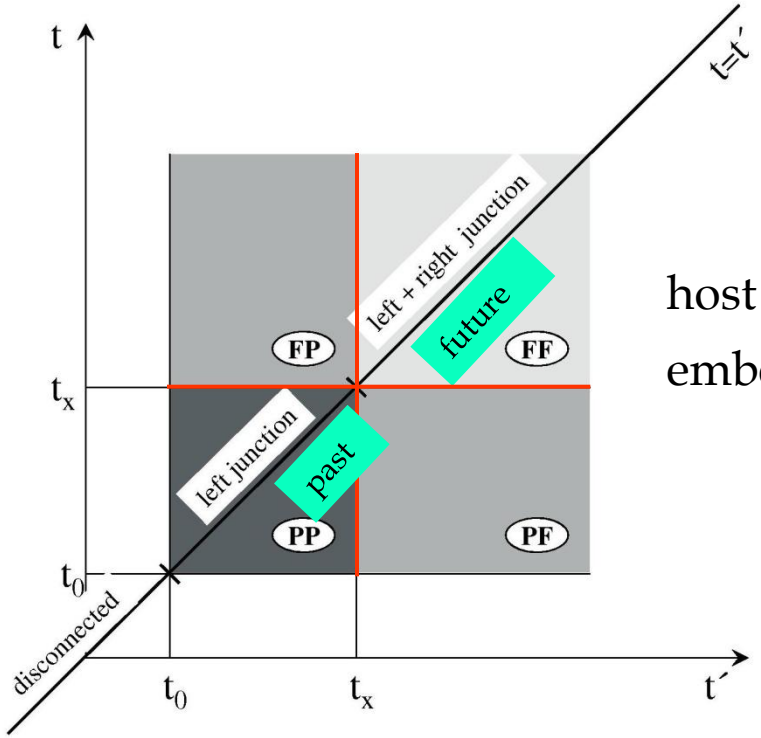

host process…L coupled

embedded process…L+R coupled

Two leads connected one by one

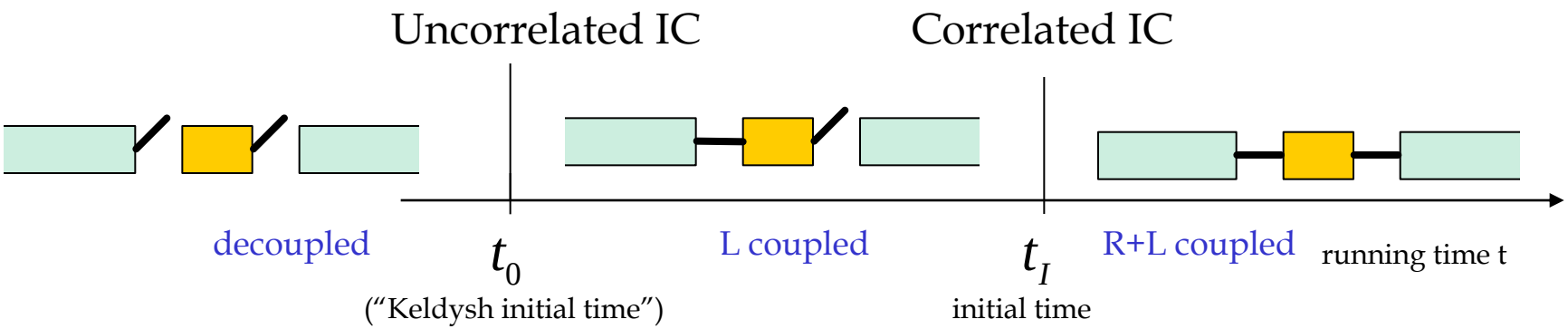

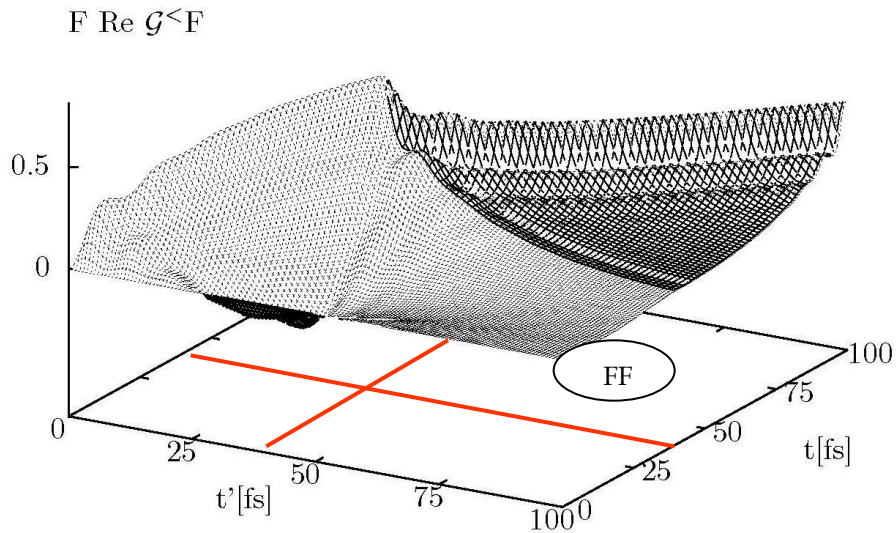

$t,t' > t_I$

$$\mathcal{G}^<(t,t') =$$

$$\mathcal{G}^R \rho_I \mathcal{G}^A + \mathcal{G}^R \, {}_o\Lambda^< \mathcal{G}^A + \mathcal{G}^R \Lambda_o^< \mathcal{G}^A + \mathcal{G}^R (\Sigma_+^< + \widehat{\Sigma}^<) \mathcal{G}^A$$

Two leads connected one by one

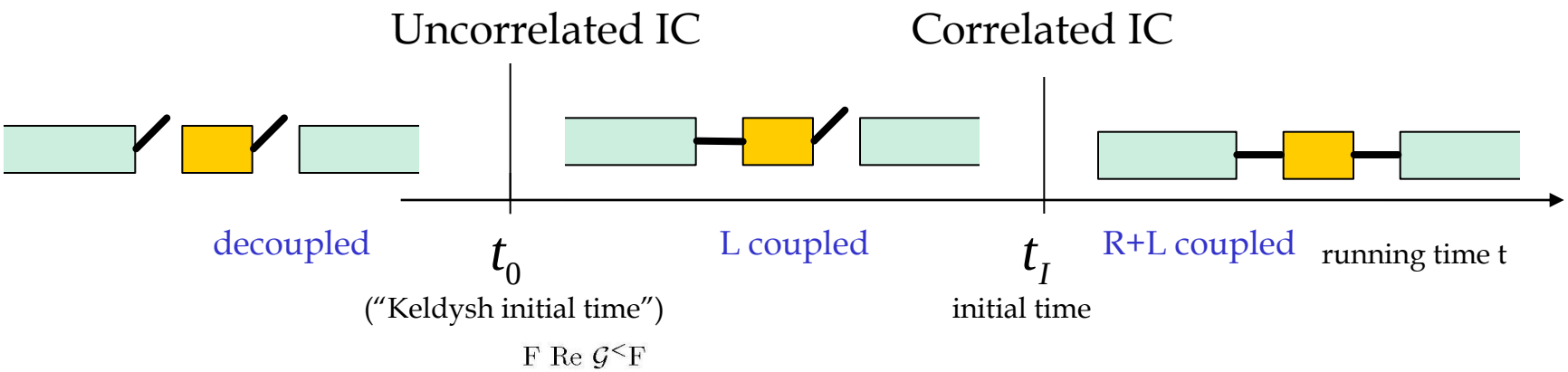

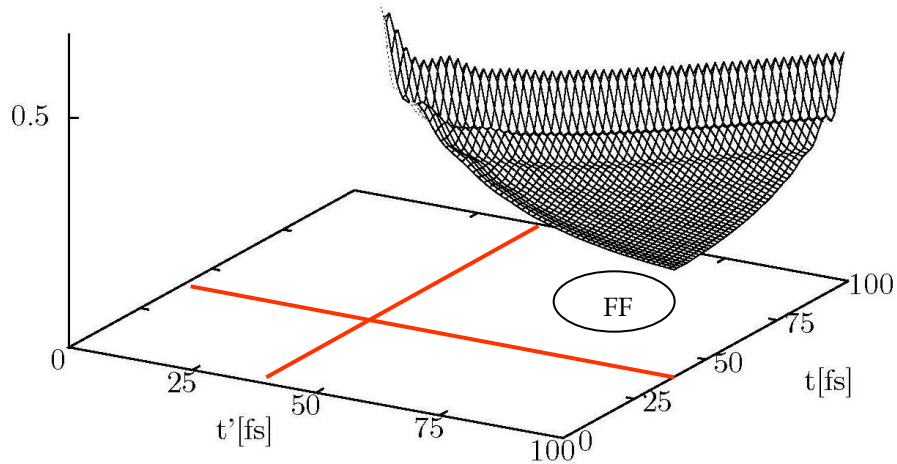

$t,t' > t_I$

$$\mathcal{G}^<(t,t') =$$

$$\mathcal{G}^R \rho_I \mathcal{G}^A + \mathcal{G}^R \, {}_o\Lambda^< \mathcal{G}^A + \mathcal{G}^R \Lambda_o^< \mathcal{G}^A + \mathcal{G}^R (\Sigma_+^< + \widehat{\Sigma}^<) \mathcal{G}^A$$

Two leads connected one by one

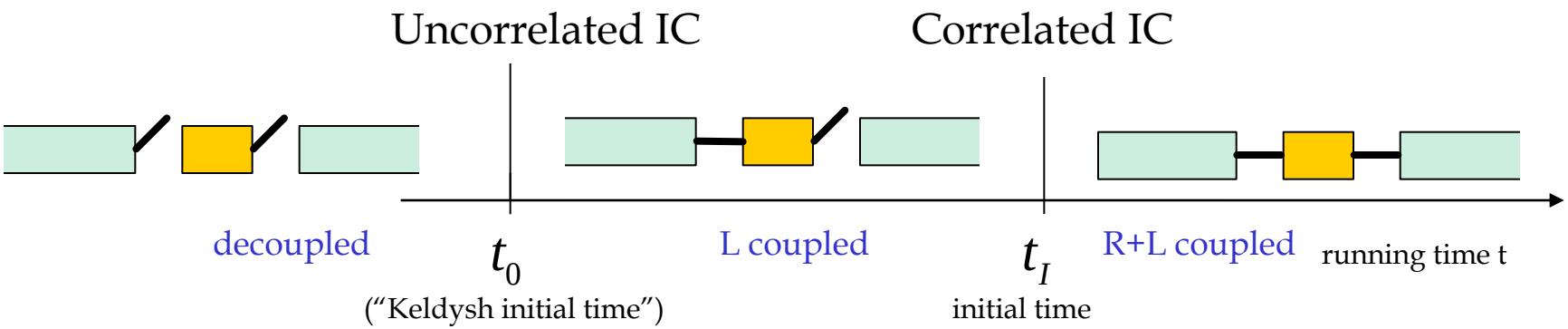

$$
\begin{aligned}
{}_{\mathrm{o}}\Lambda^{<} &= \int_{t_0}^{t_I} \left(\mathcal{G}^R_{\dashv}\Sigma^<_{\dashv} - \mathcal{G}^<_{\dashv}\Sigma^A_{\dashv}\right) \\
\Lambda^<_{\mathrm{o}} &= \int_{t_0}^{t_I} \left(\Sigma^<_{\dashv}\mathcal{G}^A_{\dashv} + \Sigma^R_{\dashv}\mathcal{G}^<_{\dashv}\right) \\
\widehat{\Sigma}^< &= \frac{\mathrm{i}}{\hbar}\int_{t_0}^{t_I}\int_{t_0}^{t_I} \left(-\Sigma^R_{\dashv}\mathcal{G}^R_{\dashv}\Sigma^<_{\dashv} + \Sigma^R_{\dashv}\mathcal{G}^<_{\dashv}\Sigma^A_{\dashv} + \Sigma^<_{\dashv}\mathcal{G}^A_{\dashv}\Sigma^A_{\dashv}\right)
\end{aligned}
$$

$t,t' > t_I$

$$
\mathcal{G}^<(t,t') =
$$

$$
\mathcal{G}^R\rho_I\mathcal{G}^A + \mathcal{G}^R\,{}_{\mathrm{o}}\Lambda^<\mathcal{G}^A + \mathcal{G}^R\Lambda^<_{\mathrm{o}}\mathcal{G}^A + \mathcal{G}^R(\Sigma^<_{+} + \widehat{\Sigma}^<)\mathcal{G}^A
$$

Two leads connected one by one

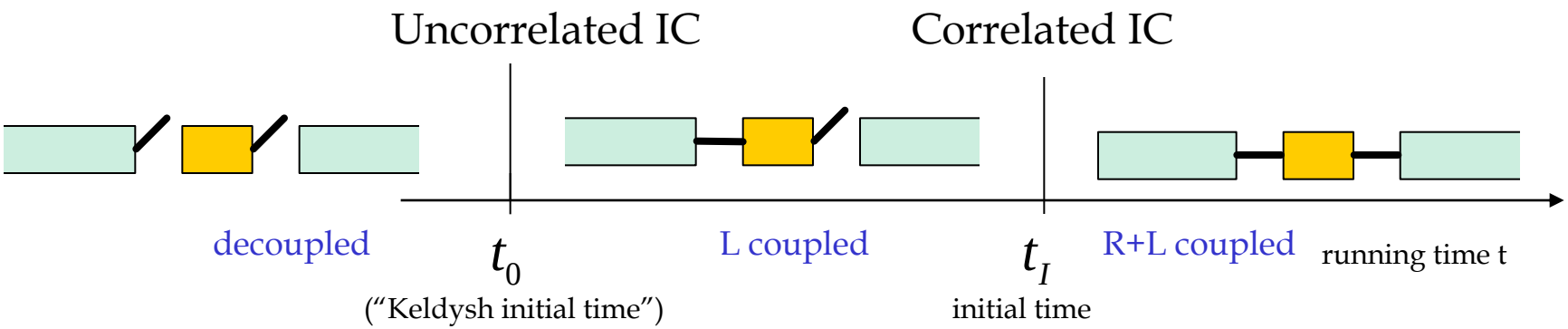

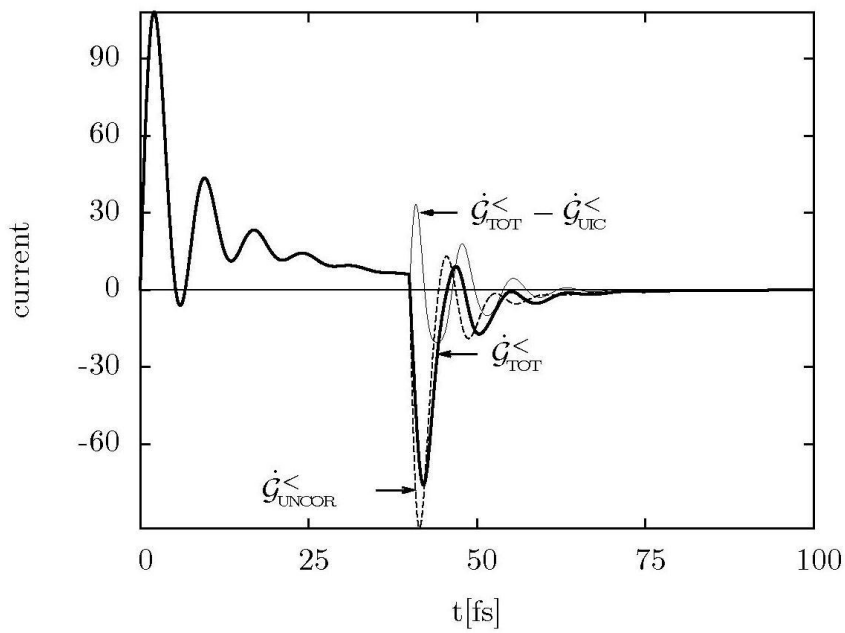

$t,t' > t_I$

$$\mathcal{G}^<_{\rm TOT}(t,t') =$$

$$\mathcal{G}^R \rho_I \mathcal{G}^A + \mathcal{G}^R \, {}_{\rm o}\Lambda^< \mathcal{G}^A + \mathcal{G}^R \Lambda^<_{\rm o} \mathcal{G}^A + \mathcal{G}^R (\Sigma^<_+ + \widehat{\Sigma}^<) \mathcal{G}^A$$

Two leads connected one by one

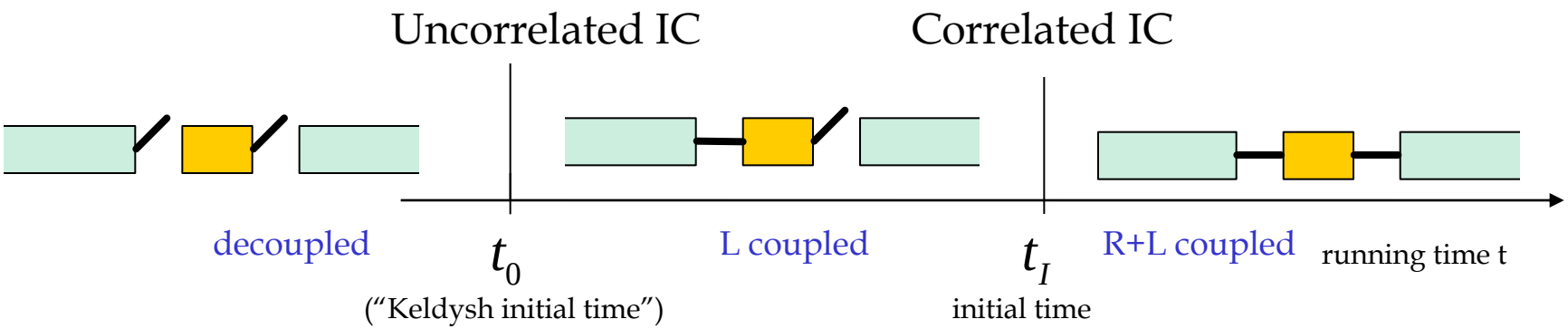

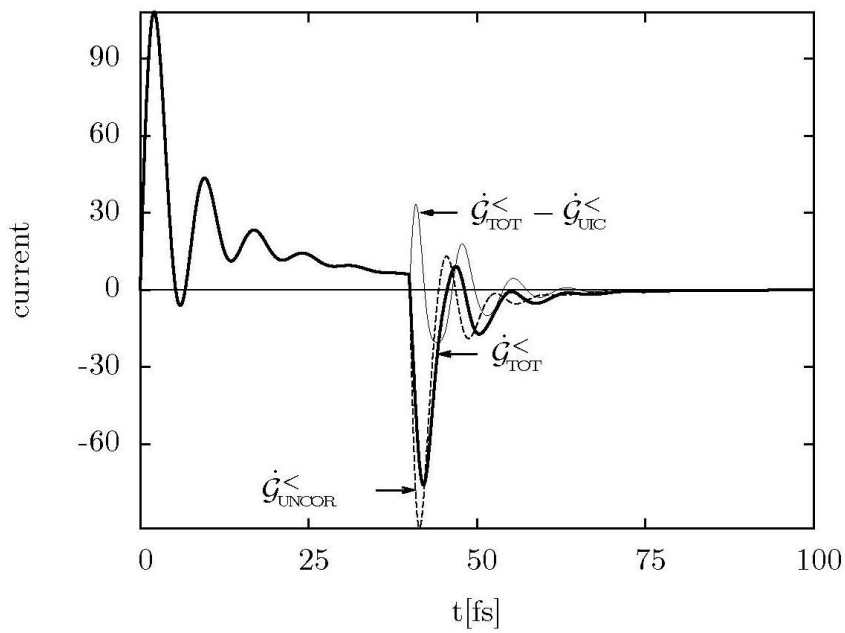

$t,t' > t_I$

$$\mathcal{G}^<_{\rm UNCOR}(t,t') =$$

$$\mathcal{G}^R \rho_I \mathcal{G}^A + \cancel{\mathcal{G}^R \Lambda^< \mathcal{G}^A} + \cancel{\mathcal{G}^R \Lambda^<_{\rm o} \mathcal{G}^A} + \mathcal{G}^R (\Sigma^<_+ + \cancel{\widehat{\Sigma}^<}) \mathcal{G}^A$$

Two leads connected one by one; finally R-off

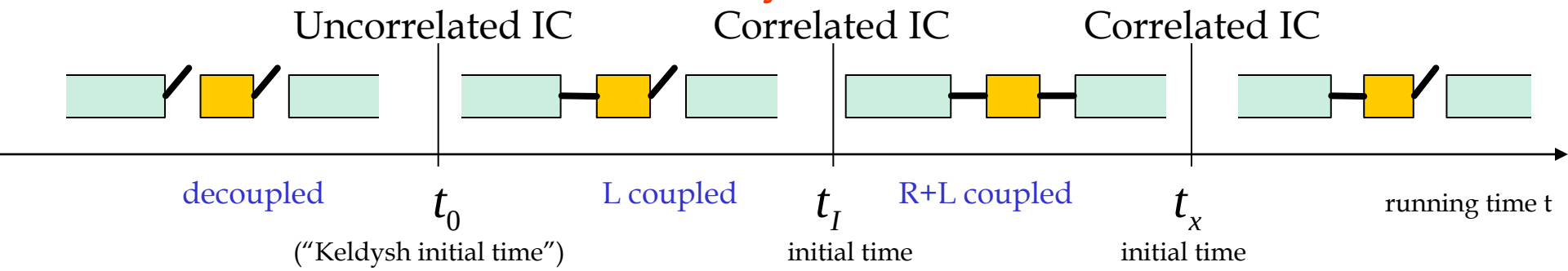

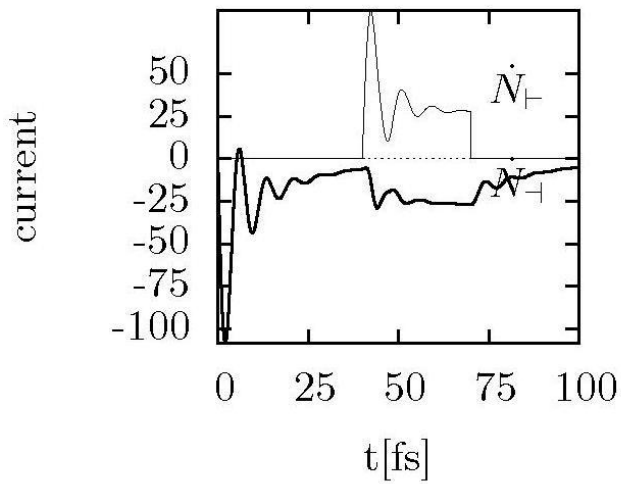

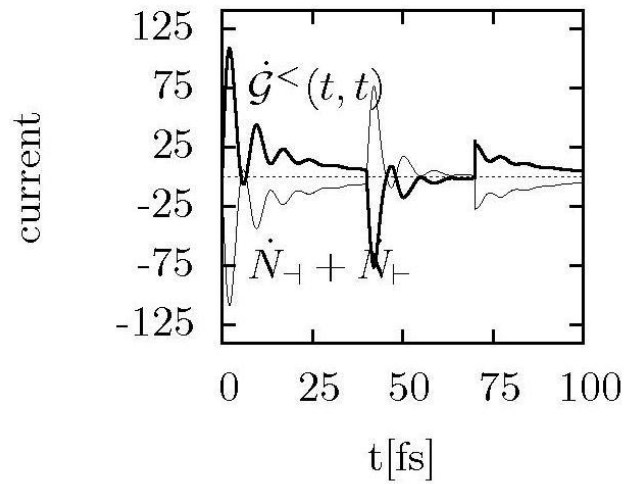

Two leads connected one by one; finally R-off

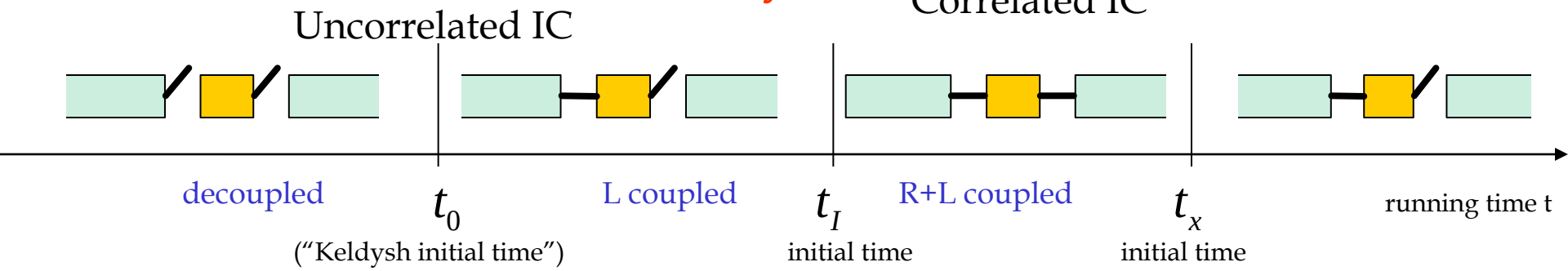

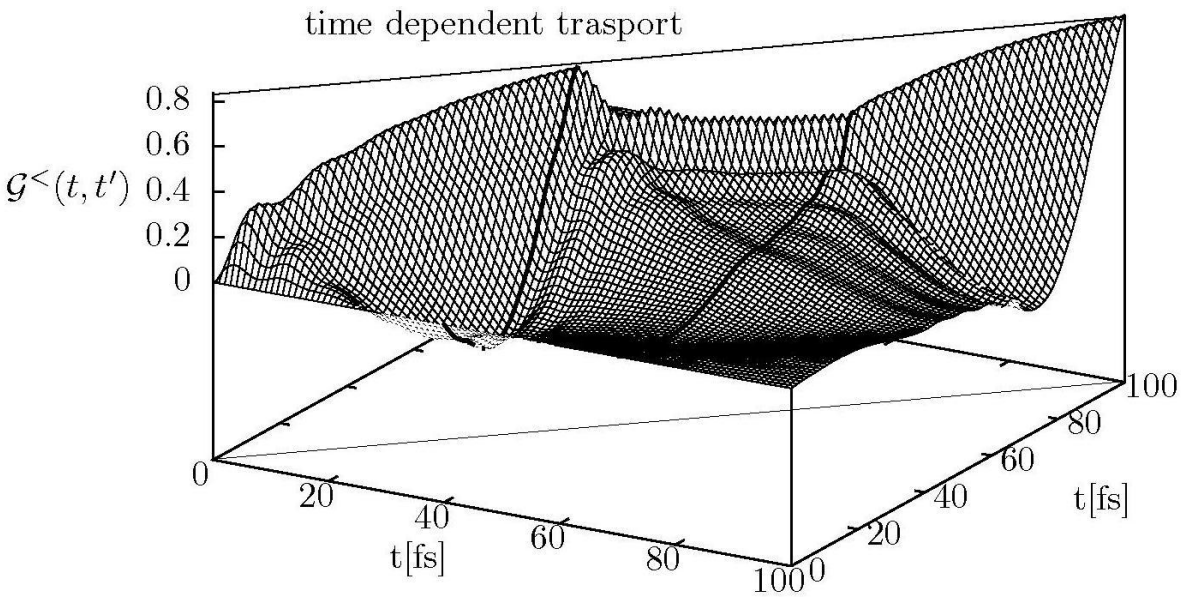

Two leads connected one by one; finally R-off

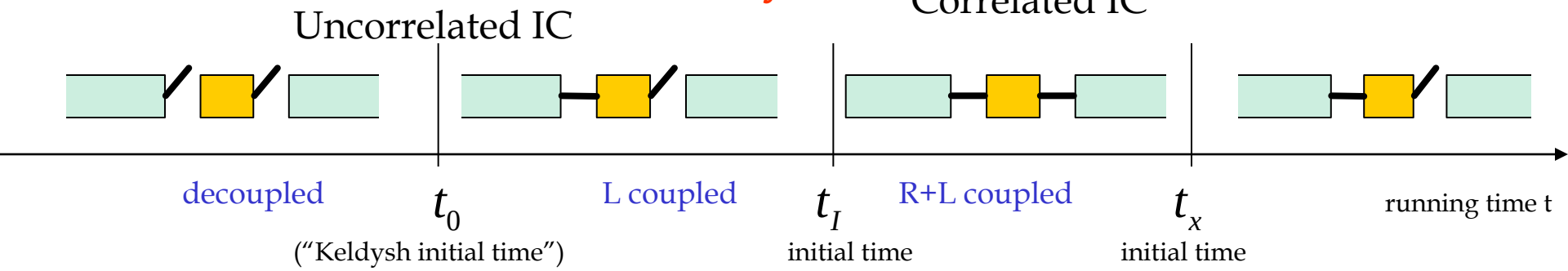

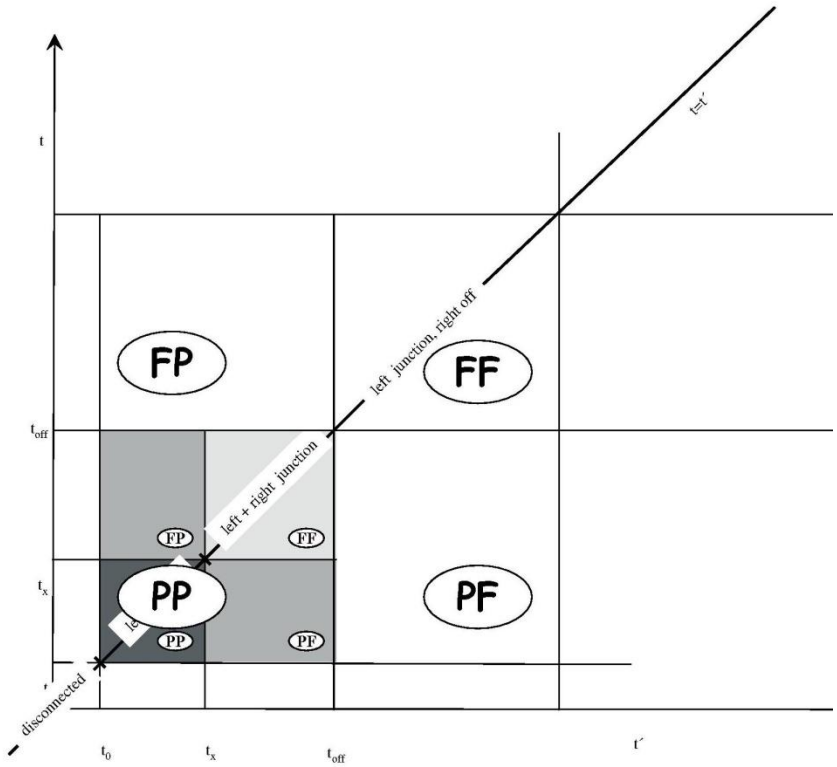

B. Velický, A. Kalvová , V. Špička *: Phys. Rev. B81, 235116 (2010)*
Correlated initial condition for an embedded process by time partitioning

B. Velický, A. Kalvová , V. Špička *: Physica E42, 525 (2010)*
Single molecule bridge as a testing ground for using NGF
outside of the steady current regime

A. Kalvová , V. Špička, B. Velický: *Non-equilibrium Statistical Physics Today*
AIP Conf. Proc. 1332, 223-225 (2011)
Fast transients in mesoscopic systems

A. –P. Jauho, N. S. Wingreen, Y. Meir: *Phys. Rev.B50, 5528 (1994)*
Time-dependent transport in interacting and noninteracting resonant-tunneling systems

Y. Meir, N. S. Wingreen, : *Phys. Rev. Lett.68, 2512 (1992)*
Time-dependent transport in interacting and noninteracting resonant-tunneling systems